GENERAL CATALOGUE

ELLIS®
EXCELLENCE
IN WHEEL ACCESSORIES

INDEX

Ellis. Changing the world of wheel accessories **06**

The quality guarantee of real made in Italy 08

Service. True manufacturing 10

Finishing and packaging 12

Technology makes the difference 14

1.0 WHEEL LUG NUTS **16**

1.1 LUG NUTS 18

1.2 TUNER LUG NUTS 51

1.3 TUNER LUG NUT ADAPTOR 54

2.0 WHEEL LUG BOLTS **56**

2.1 LUG BOLTS 58

2.2 TUNER LUG BOLTS 99

2.3 TUNER LUG BOLT ADAPTOR 106

3.0 WHEEL LOCK NUTS & BOLTS **108**

3.1 LOCK BOLT KIT - CONE SEAT 110

3.2 LOCK BOLT KIT - BALL SEAT 111

3.3 OPEN LOCK NUT KIT 112

3.4 CLOSED LOCK NUT KIT 113

4.0 WHEEL & HUB STUDS **114**

4.1 SPLINE WHEEL STUDS 116

4.2 HUB STUDS 121

5.0 HUB CENTRIC RINGS **126**

5.1 HUB CENTRIC RINGS 128

OEM - ORIGINAL EQUIPMENT ACCESSORIES **132**

THE ELLIS MODEL CODE SYSTEM **174**

GLOSSARY **177**

GENERAL TERMS OF SALE **178**

ELLISENGINEERING.IT

ELLIS
EXCELLENCE
IN WHEEL ACCESSORIES

ELLIS, CHANGING THE WORLD OF WHEEL ACCESSORIES

At Ellis, technology, innovation and safety are our constantly evolving values and objectives as we strive towards the highest standards of quality. This clear Mission for the future is based on a solid past during which our commitment to progress was forged and our rich experience matured. Our company history spans almost 50 years, half a century marked by research, experimentation, industrialisation and manufacture of products in sectors defined by constant change and the very highest expectations. Strengthened by our heritage, we design and manufacture cutting-edge accessories sharing with our clients unrivalled energy and excitement about the future.

Tecnologia, innovazione e sicurezza sono i nostri valori e obiettivi in continua evoluzione verso il massimo della qualità. Alla chiarezza della nostra mission si unisce la certezza di un passato che ha forgiato la nostra attitudine al progresso e ha creato la ricchezza dell'esperienza maturata nei quasi 50 anni di storia del nostro gruppo. Anni che significano da sempre ricerca, sperimentazione, industrializzazione e realizzazione di prodotti in settori caratterizzati da una rapida evoluzione e altissime aspettative. Forti di questo bagaglio progettiamo e realizziamo accessori all'avanguardia condividendo con i nostri clienti l'entusiasmante corsa verso il futuro.

Die Gewährleistung höchster Qualität in Technologie, Innovation und Sicherheit unserer Produkte ist das Ziel, welches wir durch deren ständige Weiterentwicklung erreichen. Zur Klarheit unserer Mission kommt der Reichtum an Erfahrung, der in der beinahe 50-jährigen Geschichte unserer Unternehmensgruppe gewachsen ist. Jahre, die schon immer Forschung, Experimentierung, Industrialisierung und Herstellung von Produkten in verschiedenen Branchen bedeuten, die von ständiger Entwicklung der Technologie und höchsten Erwartungen geprägt sind. Dank unserer großen Erfahrung, sind wir in der Lage modernes Zubehör zu planen und zu fertigen und teilen mit unseren Kunden die aufregende Zukunft.

La tecnología, innovación y seguridad constituyen nuestros valores y objetivos que evolucionan constantemente a fin de lograr lo máximo en términos de calidad de producto y de servicio. La claridad de nuestra misión se une a la certeza de un pasado que ha forjado nuestra actitud hacia el progreso y ha creado una amplia experiencia que fue creciendo en los casi 50 años de historia de nuestro grupo. Estos años son sinónimo de investigación, experimentación, industrialización y realización de productos en sectores que se caracterizan por una rápida evolución tecnológica y altísimas expectativas. Respaldados por este bagaje de experiencia, diseñamos y realizamos accesorios de vanguardia compartiendo con nuestros clientes la emocionante carrera hacia el futuro.

Технология, инновации и безопасность представляют собой наши основные задачи и цели. Мы постоянно стремимся к максимальному качеству продукции и услуг. Наши цели дополнительно подкрепляются нашим неизменным стремлением к прогрессу, опытом работы, накопленным за почти 50 лет истории нашей группы. За эти годы мы вели неустанные исследования, проводили эксперименты, занимались индустриализацией и создавали изделия, применяемые в областях,характеризующихся быстрой технологической эволюцией и высочайшими требованиями. Благодаря нашим знаниям мы проектируем и производим современные аксессуары, вовлекая наших заказчиков в движение к будущему.

ELLISENGINEERING.IT

ELLIS®
EXCELLENCE
IN WHEEL ACCESSORIES

THE QUALITY GUARANTEE OF REAL MADE IN ITALY

In its company-owned facilities Ellis manufactures and tests every single product based on a UNI EN ISO 9001:2015 compliant management system. Tight control is also maintained over the entire production cycle from raw material selection to packaging so as to provide clients with a water-tight guarantee that specifications are precisely followed.

Ellis, negli stabilimenti dell'azienda, realizza e verifica ogni singolo elemento secondo un sistema di gestione conforme alle norme UNI EN ISO 9001:2015. A questo si aggiunge il controllo dell'intera filiera produttiva, dalle materie prime alla confezione in modo da garantire al cliente il rispetto delle specifiche.

Bei Ellis unterliegt die Herstellung und Qualitätsprüfung jeder Komponente der Überwachung eines Qualitäts-Management-Systems, das nach den Vorschriften der UNI EN ISO 9001:2015 Norm. Darüber hinaus wird die gesamte Produktionskette vom Rohmaterial bis zum fertigen Produkt ständig überwacht um unseren Kunden die Einhaltung der technischen Spezifikationen zu gewährleisten.

En las plantas de la empresa, Ellis realiza y controla cada elemento según un sistema de gestión conforme a las normas UNI EN ISO 9001:2015. A esto se suma el control de toda la cadena de producción, desde las materias primas hasta el producto embalado, para garantizar al cliente el cumplimiento de las especificaciones técnicas.

Компания Ellis производит и испытывает на своих заводах каждый элемент, в соответствии с системой управления согласно стандарту UNI EN ISO 9001:2015. К этому следует добавить контроль за всем производственным циклом, от сырьевых материалов до готовой продукции, чтобы гарантировать заказчику выполнение технических спецификаций.

TÜV CERTIFICATION ISO 9001

ELLISENGINEERING.IT

ELLIS®
EXCELLENCE
IN WHEEL ACCESSORIES

TRUE MANUFACTURING. FROM FULLY STOCKED WAREHOUSE TO TAILOR MADE SERVICE THROUGH TECHNOLOGY

The production system is the real operational heart of Ellis. Clients have the widest possible range of products to choose from as a result of advanced production processes and flexible warehouse management. The production team and client work closely together to thoroughly assess needs so as to choose between rapid production of custom-made items or effective co-engineering projects based on the level of service the client requires.

Il sistema produttivo è il vero cuore operativo di Ellis: attraverso i processi produttivi si è in grado di garantire ai clienti la più ampia disponibilità di prodotti attraverso la gestione flessibile del magazzino. La vicinanza tra la produzione e il cliente permette la veloce realizzazione di prodotti custom, o realizzati in co-engineering, anche attraverso la scelta da parte del cliente del livello di servizio più adeguato.

Das Produktionssystem ist das Herz des Unternehmens Ellis: Durch die effektiven Produktionsprozesse und die Flexibilität der Lagerhaltung sind wir in der Lage, den Kunden die höchstmögliche Verfügbarkeit der Produkte zu gewährleisten. Die enge Zusammenarbeit zwischen der Produktionsabteilung und den Kunden ermöglicht die schnelle Fertigung von Custom- und Co-engineering Produkten und die Auswahl der passenden Dienstleistung.

El sistema de producción es el verdadero corazón de Ellis: los procesos de producción aseguran a los clientes la más amplia disponibilidad de productos a través de la gestión flexible del almacén. La proximidad entre la producción y el cliente permite la rápida realización de productos personalizados o realizados en coingeniería, incluso a través de la elección, por parte del cliente, del nivel de servicio adecuado.

Производственная система является подлинным сердцем компании Ellis: наши производственные процессы способны гарантировать заказчикам постоянное наличие продукции, благодаря гибкому управлению складом. Близость производства и заказчика позволяет быстро выполнять индивидуальные заказы или производить продукцию с применением совместного инжиниринга, в том числе позволяя выбрать заказчику требуемый ему уровень обслуживания.

ELLIS EXCELLENCE IN WHEEL ACCESSORIES

FINISHING & PACKAGING

Total and complete control over the production line guarantees exceptional attention to detail throughout all phases of manufacture, including for customized finishing solutions. Great care is also taken with packaging so products arrive at their destination in perfect condition. Personalized packaging solutions based on precise client specifications are available on request.

Il completo e preciso controllo della filiera produttiva contempla un'attenta cura dei dettagli applicata a tutte le fasi di produzione, tra cui le soluzioni di finitura personalizzate. Allo stesso modo massima attenzione è riservata agli imballi in modo da permettere che i prodotti giungano alle sedi dei clienti in perfetto stato. La personalizzazione di questi elementi è possibile su particolare specifica del cliente.

Die vollständige und genaue Überwachung der Produktionskette schließt auch eine gewissenhafte Beachtung der Details in jeder Produktionsphase ein, was insbesondere auch die kundenspezifische Endbearbeitung betrifft. In derselben Weise wird den Verpackungen höchste Aufmersamkeit zuteil, um sicherzustellen, dass die Produkte die Kunden in perfektem Zustand erreichen. Auf Wunsch der Kunden ist die Personalisierung dieser Elemente möglich.

El control completo y preciso de la cadena de producción contempla una cuidadosa atención a los detalles aplicada a todas las etapas de producción, incluyendo soluciones personalizadas de acabado. A su vez, los productos se embalan prestando la máxima atención para que lleguen a las instalaciones del cliente en perfectas condiciones. Estos elementos se pueden personalizar a pedido del cliente.

Полное и точное управление производственным циклом предусматривает повышенное внимание к деталям, применительно ко всем фазам производства, в том числе решения для индивидуальной отделки изделий. Такое же внимание уделяется упаковке, чтобы изделия поступали к заказчику неповрежденными. Индивидуальное оформление данных элементов возможно по требованию заказчика.

Ellis Engineering is the new member company of the Comunello Group from which it has inherited continuous improvement philosophy and values, to be attained through investment in technologies, equipment, know-how and development of human resources. As a result the company presents itself as new and innovative yet has solid, decades-long heritage and experience. This unbeatable combination enables it to reach the highest levels of precision and performance so as to fully respond to the most complex and advanced client requests.

ELLISENGINEERING.IT

TECHNOLOGY MAKES THE DIFFERENCE

ELLIS®
EXCELLENCE
IN WHEEL ACCESSORIES

Ellis Engineering è la nuova società di Comunello Group da cui eredita la filosofia e i valori di continuo miglioramento tramite l'investimento in tecnologie, attrezzature, know how e sullo sviluppo delle risorse interne. Si presenta quindi come azienda nuova ed innovativa, forte di una solida base di esperienza che permette di ottenere risultati di precisione e prestazioni che soddisfano ampiamente le più complesse ed avanzate esigenze dei clienti.

Ellis Engineering ist die neue Gesellschaft der Comunello-Gruppe, die ihr die Philosophie und die Werte einer ständigen Verbesserung durch Investitionen in Technologien, Ausrüstungen und Know-how und einer Entwicklung betriebsinterner Ressourcen übertragen hat. Ellis Engineering präsentiert sich als neues und innovatives Unternehmen, das kraft eines umfangreichen Erfahrungsschatzes Ergebnisse erzielt, die in puncto Präzision und Leistungen die schwierigsten und anspruchsvollsten Anforderungen der Kunden in vollem Ausmaß erfüllen.

Ellis Engineering es la nueva sociedad de Grupo Comunello de la que hereda la filosofía y los valores de mejora continua lograda a través de la inversión en tecnología, equipos, know how y en el desarrollo de los recursos humanos. Así se presenta como una compañía nueva e innovadora, con una base sólida de experiencia que le permite lograr resultados de precisión y rendimientos que satisfacen ampliamente las necesidades más complejas y exigentes de los clientes.

Ellis Engineering – это новая компания Comunello Group, разделяющая ее идеи и философию постоянного совершенствования, совершая крупные инвестиции в технологии, оборудование, ноу-хау и развитие внутренних ресурсов. Это новая и инновационная компания, сильная благодаря прочным основам и опыту, позволяющим получить эксплуатационные характеристики и результаты, полностью удовлетворяющие самые сложные и современные требования заказчиков.

"You can't build a reputation on what you are going to do."
Henry Ford

ELLIS
EXCELLENCE
IN WHEEL ACCESSORIES

WHEEL LUG NUTS

1.1 WHEEL LUG NUTS
1.2 TUNER LUG NUTS
1.3 TUNER LUG NUT ADAPTOR

1.1 WHEEL LUG NUTS

DADI FISSAGGIO / RADMUTTER
TUERCAS DE FIJACION / КОЛЕСНЫЕ ГАЙКИ

HEX	CONE	HEIGHT	
17 MM	60° SEAT	34 MM	CLOSED

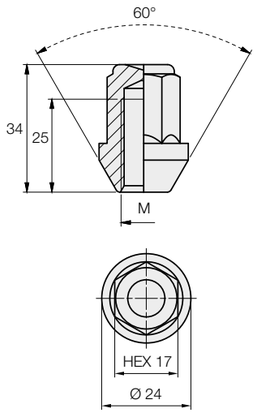

Model code	Art.	Thread size	Hex	H	Finish	Stock
N17ACN34C	N150	M 12 x 1.25	17	34	Galvanized	■
N17BCN34C	N151	M 12 x 1.5	17	34	Galvanized	■
N17CCN34C	N152	M 12 x 1.75	17	34	Galvanized	■
N17ECN34C	N153	M 14 x 1.5	17	34	Galvanized	■
N17GCN34C	N154	M 14 x 2	17	34	Galvanized	■
N17JCN34C	N155	3/8 UNF	17	34	Galvanized	■
N17ICN34C	N156	7/16 UNF	17	34	Galvanized	■
N17HCN34C	N157	1/2 UNF	17	34	Galvanized	■
N17KCN34C	N158	9/16 UNF	17	34	Galvanized	■

HEX	CONE	HEIGHT	
17 MM	60° SEAT	34 MM	CLOSED

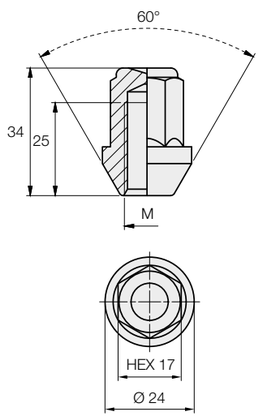

Model code	Art.	Thread size	Hex	H	Finish	Stock
N17ACN34CST08	N150B	M 12 x 1.25	17	34	Special Black	■
N17BCN34CST08	N151B	M 12 x 1.5	17	34	Special Black	■
N17HCN34CST08	N157B	1/2 UNF	17	34	Special Black	■

HEX	CONE	HEIGHT	
17 MM	60° SEAT	23 MM	OPEN

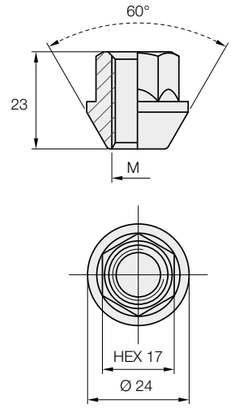

Model code	Art.	Thread size	Hex	H	Finish	Stock
N17ACN230	N100	M 12 x 1.25	17	23	Galvanized	■
N17BCN230	N101	M 12 x 1.5	17	23	Galvanized	■
N17CCN230	N102	M 12 x 1.75	17	23	Galvanized	■
N17ECN230	N103	M 14 x 1.5	17	23	Galvanized	■
N17GCN230	N104	M 14 x 2	17	23	Galvanized	■
N17JCN230	N105	3/8 UNF	17	23	Galvanized	■
N17ICN230	N106	7/16 UNF	17	23	Galvanized	■
N17HCN230	N107	1/2 UNF	17	23	Galvanized	■
N17KCN230	N108	9/16 UNF	17	23	Galvanized	■

HEX	CONE	HEIGHT	
17 MM	60° SEAT	18.5 MM	OPEN

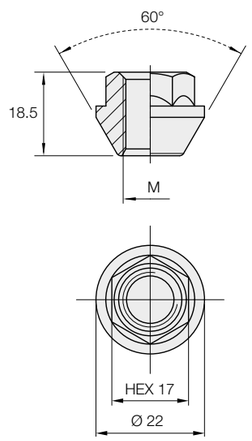

CLASS 10

Model code	Art.	Thread size	Hex	H	Finish	Stock
N17ACN180A0	N1076	M 12 x 1.25	17	18.5	Galvanized	■
N17BCN180A0	N1075	M 12 x 1.5	17	18.5	Galvanized	■

■ May not be in stock - please enquire.

1.1 WHEEL LUG NUTS

DADI FISSAGGIO / RADMUTTER
TUERCAS DE FIJACION / КОЛЕСНЫЕ ГАЙКИ

HEX	BALL	HEIGHT	
17 MM	R12 SEAT	18 MM	OPEN

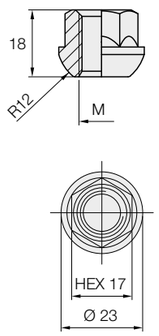

CLASS 10

Model code	Art.	Thread size	Hex	H	Finish	Stock
N17AS2180	N125	M 12 x 1.25	17	18	Galvanized	■
N17BS2180	N126	M 12 x 1.5	17	18	Galvanized	■
N17CS2180	N127	M 12 x 1.75	17	18	Galvanized	■
N17ES2180	N128	M 14 x 1.5	17	18	Galvanized	■
N17GS2180	N129	M 14 x 2	17	18	Galvanized	■
N17JS2180	N130	3/8 UNF	17	18	Galvanized	■
N17IS2180	N131	7/16 UNF	17	18	Galvanized	■
N17HS2180	N132	1/2 UNF	17	18	Galvanized	■
N17KS2180	N133	9/16 UNF	17	18	Galvanized	■

HEX	CONE	HEIGHT	
19 MM	60° SEAT	34 MM	CLOSED

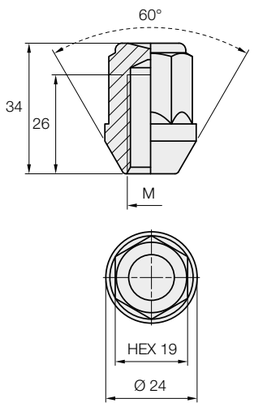

Model code	Art.	Thread size	Hex	H	Finish	Stock
N19ACN34C	N400	M 12 x 1.25	19	34	Galvanized	■
N19BCN34C	N401	M 12 x 1.5	19	34	Galvanized	■
N19CCN34C	N402	M 12 x 1.75	19	34	Galvanized	■
N19ECN34C	N403	M 14 x 1.5	19	34	Galvanized	■
N19GCN34C	N404	M 14 x 2	19	34	Galvanized	■
N19JCN34C	N405	3/8 UNF	19	34	Galvanized	■
N19ICN34C	N406	7/16 UNF	19	34	Galvanized	■
N19HCN34C	N407	1/2 UNF	19	34	Galvanized	■
N19KCN34C	N408	9/16 UNF	19	34	Galvanized	■

HEX	CONE	HEIGHT	
19 MM	60° SEAT	34 MM	CLOSED

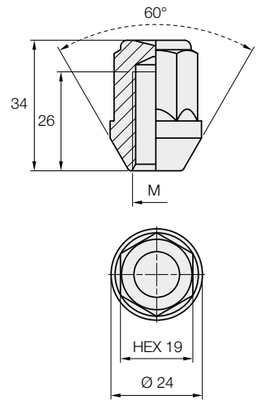

CLASS 10

Model code	Art.	Thread size	Hex	H	Finish	Stock
N19ECN34CA0	SN403	M 14 x 1.5	19	34	Galvanized	■

HEX	CONE	HEIGHT	
19 MM	60° SEAT	34 MM	CLOSED

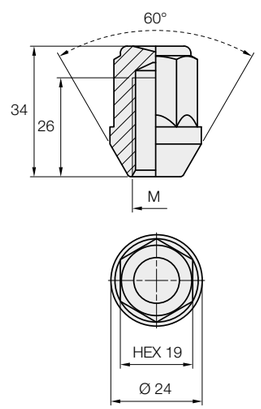

Model code	Art.	Thread size	Hex	H	Finish	Stock
N19ACN34CST08	N400B	M 12 x 1.25	19	34	Special Black	■
N19BCN34CST08	N401B	M 12 x 1.5	19	34	Special Black	■
N19ECN34CST08	N403B	M 14 x 1.5	19	34	Special Black	■
N19HCN34CST08	N407B	1/2 UNF	19	34	Special Black	■
N19KCN34CST08	N408B	9/16 UNF	19	34	Special Black	■

■ May not be in stock - please enquire.

1.1 WHEEL LUG NUTS

DADI FISSAGGIO / RADMUTTER
TUERCAS DE FIJACION / КОЛЕСНЫЕ ГАЙКИ

HEX	CONE	HEIGHT	
19 MM	60° SEAT	41 MM	CLOSED

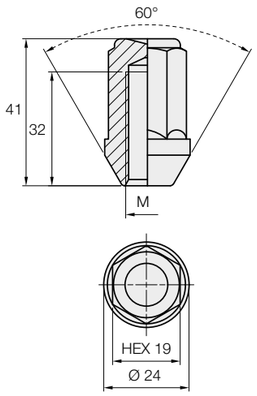

Model code	Art.	Thread size	Hex	H	Finish	Stock
N19ACN41C	N350	M 12 x 1.25	19	41	Galvanized	■
N19BCN41C	N351	M 12 x 1.5	19	41	Galvanized	■
N19CCN41C	N352	M 12 x 1.75	19	41	Galvanized	■
N19ECN41C	N353	M 14 x 1.5	19	41	Galvanized	■
N19GCN41C	N354	M 14 x 2	19	41	Galvanized	■
N19JCN41C	N355	3/8 UNF	19	41	Galvanized	■
N19ICN41C	N356	7/16 UNF	19	41	Galvanized	■
N19HCN41C	N357	1/2 UNF	19	41	Galvanized	■
N19KCN41C	N358	9/16 UNF	19	41	Galvanized	■

HEX	CONE	HEIGHT	
19 MM	60° SEAT	41 MM	CLOSED

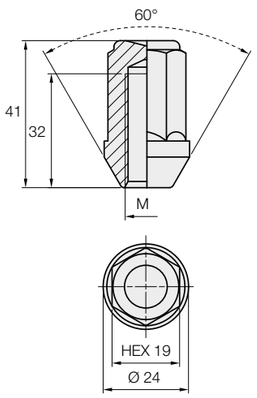

Model code	Art.	Thread size	Hex	H	Finish	Stock
N19ECN41CST08	N353B	M 14 x 1.5	19	41	Special black	■

HEX	CONE	HEIGHT	
19 MM	60° WITH SHANK	34 MM	CLOSED

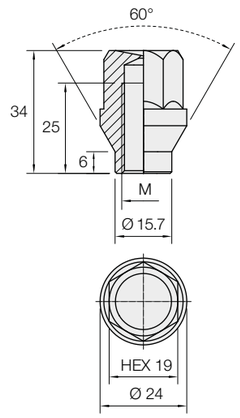

Model code	Art.	Thread size	Hex	H	Finish	Stock
N19ART34C	N425	M 12 x 1.25	19	34	Galvanized	■
N19BRT34C	N426	M 12 x 1.5	19	34	Galvanized	■
N19CRT34C	N427	M 12 x 1.75	19	34	Galvanized	■
N19ERT34C	N428	M 14 x 1.5	19	34	Galvanized	■
N19GRT34C	N429	M 14 x 2	19	34	Galvanized	■
N19JRT34C	N430	3/8 UNF	19	34	Galvanized	■
N19IRT34C	N431	7/16 UNF	19	34	Galvanized	■
N19HRT34C	N432	1/2 UNF	19	34	Galvanized	■
N19KRT34C	N433	9/16 UNF	19	34	Galvanized	■

HEX	CONE	HEIGHT	
19 MM	60° WITH SHANK	34 MM	CLOSED

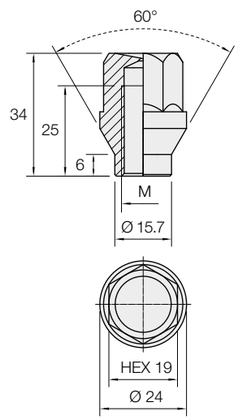

Model code	Art.	Thread size	Hex	H	Finish	Stock
N19ART34CST08	N425B	M 12 x 1.25	19	34	Special Black	■
N19BRT34CST08	N426B	M 12 x 1.5	19	34	Special Black	■
N19ERT34CST08	N428B	M 14 x 1.5	19	34	Special Black	■

■ May not be in stock - please enquire.

ELLIS EXCELLENCE IN WHEEL ACCESSORIES

1.1 WHEEL LUG NUTS

DADI FISSAGGIO / RADMUTTER
TUERCAS DE FIJACION / КОЛЕСНЫЕ ГАЙКИ

HEX	CONE	HEIGHT	
19 MM	60° SEAT	15 MM	OPEN

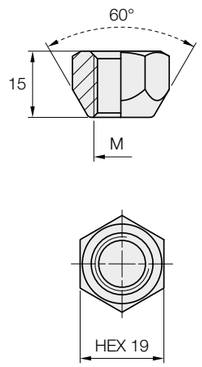

Model code	Art.	Thread size	Hex	H	Finish	Stock
N19ACN150	N225	M 12 x 1.25	19	15	Phosphate coat	■
N19BCN150	N226	M 12 x 1.5	19	15	Phosphate coat	■
N19CCN150	N227	M 12 x 1.75	19	15	Phosphate coat	■
N19ECN150	N228	M 14 x 1.5	19	15	Phosphate coat	■
N19GCN150	N229	M 14 x 2	19	15	Phosphate coat	■
N19JCN150	N230	3/8 UNF	19	15	Phosphate coat	■
N19ICN150	N231	7/16 UNF	19	15	Phosphate coat	■
N19HCN150	N232	1/2 UNF	19	15	Phosphate coat	■
N19KCN150	N233	9/16 UNF	19	15	Phosphate coat	■

HEX	CONE	HEIGHT	
19 MM	60° SEAT	15 MM	OPEN

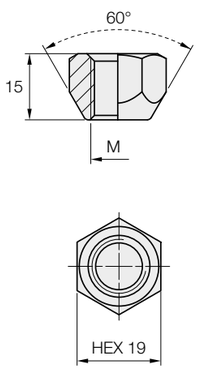

CLASS 10

Model code	Art.	Thread size	Hex	H	Finish	Stock
N19BCN150A0	SN2260	M 12 x 1.5	19	15	Galvanized	■

HEX	CONE	HEIGHT	
19 MM	60° SEAT	17 MM	OPEN

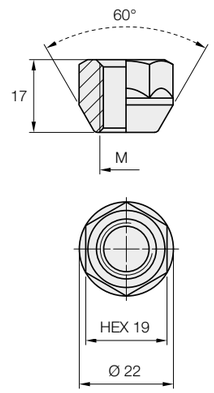

Model code	Art.	Thread size	Hex	H	Finish	Stock
N19ACN170	N200	M 12 x 1.25	19	17	Galvanized	■
N19BCN170	N201	M 12 x 1.5	19	17	Galvanized	■
N19CCN170	N202	M 12 x 1.75	19	17	Galvanized	■
N19DCN170	N209	M 14 x 1.25	19	17	Galvanized	■
N19ECN170	N203	M 14 x 1.5	19	17	Galvanized	■
N19GCN170	N204	M 14 x 2	19	17	Galvanized	■
N19JCN170	N205	3/8 UNF	19	17	Galvanized	■
N19ICN170	N206	7/16 UNF	19	17	Galvanized	■
N19HCN170	N207	1/2 UNF	19	17	Galvanized	■
N19KCN170	N208	9/16 UNF	19	17	Galvanized	■

HEX	CONE	HEIGHT	
19 MM	60° SEAT	17 MM	OPEN

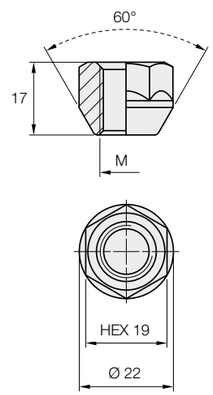

CLASS 10

Model code	Art.	Thread size	Hex	H	Finish	Stock
N19BCN170A0	SN201	M 12 x 1.5	19	17	Galvanized	■
N19ECN170A0	SN203	M 14 x 1.5	19	17	Galvanized	■

■ May not be in stock - please enquire.

ELLIS EXCELLENCE IN WHEEL ACCESSORIES

1.1 WHEEL LUG NUTS

DADI FISSAGGIO / RADMUTTER
TUERCAS DE FIJACION / КОЛЕСНЫЕ ГАЙКИ

HEX	CONE	HEIGHT	
19 MM	60° SEAT	17 MM	OPEN

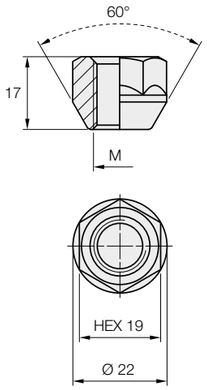

Model code	Art.	Thread size	Hex	H	Finish	Stock
N19ACN17OST08	N200B	M 12 x 1.25	19	17	Special Black	■
N19BCN17OST08	N201B	M 12 x 1.5	19	17	Special Black	■
N19DCN17OST08	N209B	M 14 x 1.25	19	17	Special Black	■

HEX	CONE	HEIGHT	
19 MM	60° SEAT	25 MM	OPEN

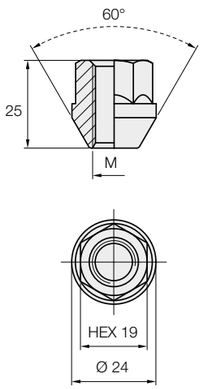

Model code	Art.	Thread size	Hex	H	Finish	Stock
N19ACN250	N175	M 12 x 1.25	19	25	Galvanized	■
N19BCN250	N176	M 12 x 1.5	19	25	Galvanized	■
N19CCN250	N177	M 12 x 1.75	19	25	Galvanized	■
N19DCN250	N184	M 14 x 1.25	19	25	Galvanized	■
N19ECN250	N178	M 14 x 1.5	19	25	Galvanized	■
N19GCN250	N179	M 14 x 2	19	25	Galvanized	■
N19JCN250	N180	3/8 UNF	19	25	Galvanized	■
N19ICN250	N181	7/16 UNF	19	25	Galvanized	■
N19HCN250	N182	1/2 UNF	19	25	Galvanized	■
N19KCN250	N183	9/16 UNF	19	25	Galvanized	■

HEX	CONE	HEIGHT	
19 MM	60° SEAT	25 MM	OPEN

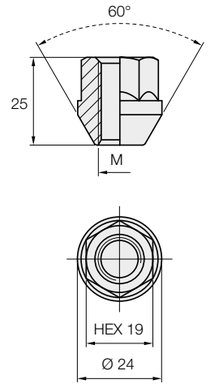

CLASS 10

Model code	Art.	Thread size	Hex	H	Finish	Stock
N19BCN250A0	SN176	M 12 X 1.5	19	25	Galvanized	■

HEX	CONE	HEIGHT	
19 MM	60° SEAT	25 MM	OPEN

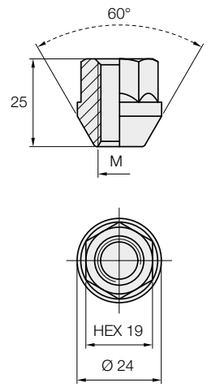

Model code	Art.	Thread size	Hex	H	Finish	Stock
N19ACN250ST08	N175B	M 12 x 1.25	19	25	Special Black	■
N19BCN250ST08	N176B	M 12 x 1.5	19	25	Special Black	■
N19DCN250ST08	N184B	M 14 x 1.25	19	25	Special Black	■
N19ECN250ST08	N178B	M 14 x 1.5	19	25	Special Black	■

■ May not be in stock - please enquire.

1.1 WHEEL LUG NUTS

DADI FISSAGGIO / RADMUTTER
TUERCAS DE FIJACION / КОЛЕСНЫЕ ГАЙКИ

HEX **19** MM | CONE **60°** WITH SHANK | HEIGHT **29** MM | **OPEN**

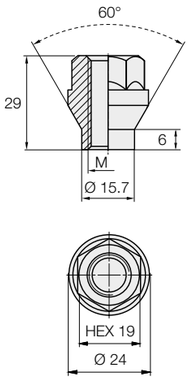

Model code	Art.	Thread size	Hex	H	Finish	Stock
N19ART290	N800	M 12 x 1.25	19	29	Galvanized	■
N19BRT290	N801	M 12 x 1.5	19	29	Galvanized	■
N19CRT290	N802	M 12 x 1.75	19	29	Galvanized	■
N19ERT290	N803	M 14 x 1.5	19	29	Galvanized	■
N19GRT290	N804	M 14 x 2	19	29	Galvanized	■
N19JRT290	N805	3/8 UNF	19	29	Galvanized	■
N19IRT290	N806	7/16 UNF	19	29	Galvanized	■
N19HRT290	N807	1/2 UNF	19	29	Galvanized	■
N19KRT290	N808	9/16 UNF	19	29	Galvanized	■

HEX **19** MM | BALL **R12** SEAT | HEIGHT **18** MM | **OPEN**

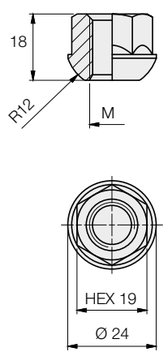

CLASS 10

Model code	Art.	Thread size	Hex	H	Finish	Stock
N19AS2180	N275	M 12 x 1.25	19	18	Galvanized	■
N19BS2180	N276	M 12 x 1.5	19	18	Galvanized	■
N19CS2180	N277	M 12 x 1.75	19	18	Galvanized	■
N19ES2180	N278	M 14 x 1.5	19	18	Galvanized	■
N19GS2180	N279	M 14 x 2	19	18	Galvanized	■
N19JS2180	N280	3/8 UNF	19	18	Galvanized	■
N19IS2180	N281	7/16 UNF	19	18	Galvanized	■
N19HS2180	N282	1/2 UNF	19	18	Galvanized	■
N19KS2180	N283	9/16 UNF	19	18	Galvanized	■

HEX **19** MM | BALL **R14** SEAT | HEIGHT **20** MM | **OPEN**

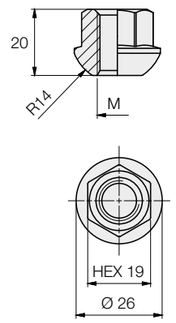

CLASS 10

Model code	Art.	Thread size	Hex	H	Finish	Stock
N19AS4200	N250	M 12 x 1.25	19	20	Galvanized	■
N19BS4200	N251	M 12 x 1.5	19	20	Galvanized	■
N19CS4200	N252	M 12 x 1.75	19	20	Galvanized	■
N19ES4200	N253	M 14 x 1.5	19	20	Galvanized	■
N19GS4200	N254	M 14 x 2	19	20	Galvanized	■
N19JS4200	N255	3/8 UNF	19	20	Galvanized	■
N19IS4200	N256	7/16 UNF	19	20	Galvanized	■
N19HS4200	N257	1/2 UNF	19	20	Galvanized	■
N19KS4200	N258	9/16 UNF	19	20	Galvanized	■

HEX **19** MM | BALL **R13** SEAT | HEIGHT **20** MM | **OPEN**

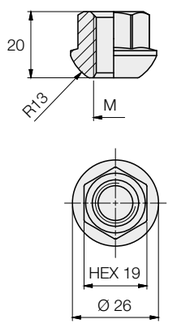

CLASS 10

Model code	Art.	Thread size	Hex	H	Finish	Stock
N19ES3200	SN253	M 14 x 1.5	19	20	Galvanized	■

■ May not be in stock - please enquire.

1.1 WHEEL LUG NUTS

DADI FISSAGGIO / RADMUTTER
TUERCAS DE FIJACION / КОЛЕСНЫЕ ГАЙКИ

HEX **19** MM | **FLAT** | HEIGHT **17** MM | **OPEN**

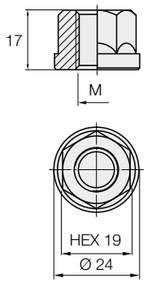

Model code	Art.	Thread size	Hex	H	Finish	Stock
N19AFS170	N875	M 12 x 1.25	19	17	Galvanized	■
N19BFS170	N876	M 12 x 1.5	19	17	Galvanized	■
N19CFS170	N877	M 12 x 1.75	19	17	Galvanized	■
N19EFS170	N878	M 14 x 1.5	19	17	Galvanized	■
N19GFS170	N879	M 14 x 2	19	17	Galvanized	■
N19JFS170	N880	3/8 UNF	19	17	Galvanized	■
N19IFS170	N881	7/16 UNF	19	17	Galvanized	■
N19HFS170	N882	1/2 UNF	19	17	Galvanized	■
N19KFS170	N883	9/16 UNF	19	17	Galvanized	■

HEX **19** MM | **FLAT** | HEIGHT **17** MM | **OPEN**

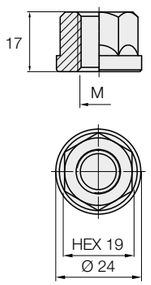

Model code	Art.	Thread size	Hex	H	Finish	Stock
N19AFS170ST08	N875B	M 12 x 1.25	19	17	Special Black	■

HEX **19** MM | **FLAT** | HEIGHT **16** MM | **OPEN**

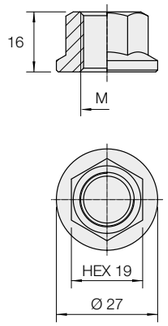

CLASS 10

Model code	Art.	Thread size	Hex	H	Finish	Stock
N19EFS160A0	N1130	M 14 x 1.5	19	16	Galvanized	■

HEX **19** MM | CONE **60°** SEAT | HEIGHT **30** MM | **STAINLESS STEEL CAP**

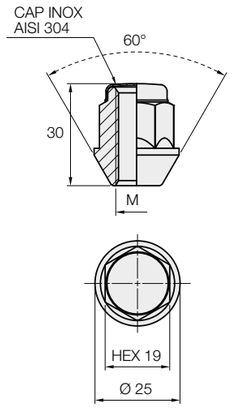

Model code	Art.	Thread size	Hex	H	Finish	Stock
N19ACN30X	N300	M 12 x 1.25	19	30	Galvanized	■
N19BCN30X	N301	M 12 x 1.5	19	30	Galvanized	■
N19CCN30X	N302	M 12 x 1.75	19	30	Galvanized	■
N19ECN30X	N303	M 14 x 1.5	19	30	Galvanized	■
N19GCN30X	N304	M 14 x 2	19	30	Galvanized	■
N19JCN30X	N305	3/8 UNF	19	30	Galvanized	■
N19ICN30X	N306	7/16 UNF	19	30	Galvanized	■
N19HCN30X	N307	1/2 UNF	19	30	Galvanized	■
N19KCN30X	N308	9/16 UNF	19	30	Galvanized	■

■ May not be in stock - please enquire.

ELLIS EXCELLENCE IN WHEEL ACCESSORIES

1.1 WHEEL LUG NUTS

DADI FISSAGGIO / RADMUTTER
TUERCAS DE FIJACION / КОЛЕСНЫЕ ГАЙКИ

HEX	CONE	HEIGHT	
19 MM	60° SEAT	30 MM	OPEN

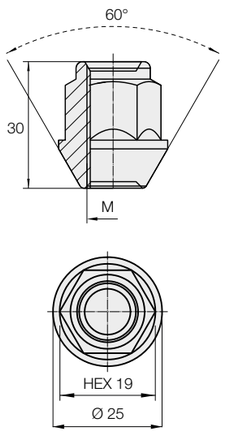

Model code	Art.	Thread size	Hex	H	Finish	Stock
N19ACN30OST0R	N300R	M 12 x 1.25	19	30	Copper	■
N19BCN30OST0R	N301R	M 12 x 1.5	19	30	Copper	■
N19ECN30OST0R	N303R	M 14 x 1.5	19	30	Copper	■

HEX	CONE	HEIGHT	
19 MM	60° SEAT	30 MM	STAINLESS STEEL CAP

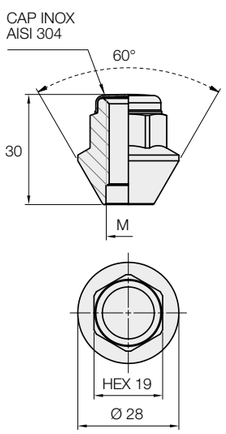

CLASS 10

Model code	Art.	Thread size	Hex	H	Finish	Stock
N19BCN30XA0	N311	M 12 x 1.5	19	30	Galvanized	■
N19ECN30XA0	N313	M 14 x 1.5	19	30	Galvanized	■

HEX	CONE	HEIGHT	
19 MM	60° SEAT	30 MM	STAINLESS STEEL CAP

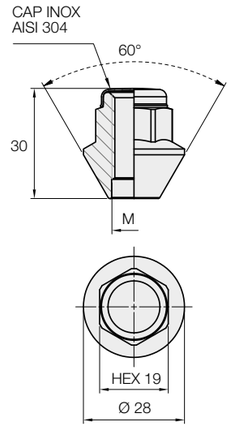

CLASS 10

Model code	Art.	Thread size	Hex	H	Finish	Stock
N19BCN30XA028	N311B	M 12 x 1.5	19	30	Special Black	■

HEX	CONE	HEIGHT	
19 MM	60° SEAT	30 MM	STAINLESS STEEL CAP

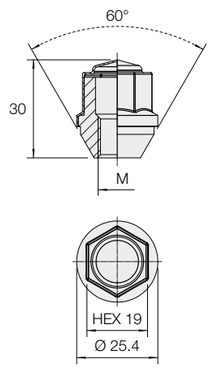

CLASS 10

Model code	Art.	Thread size	Hex	H	Finish	Stock
N19BCN30XA1	N1110	M 12 x 1.5	19	30	Zinc-Nickel	■

■ May not be in stock - please enquire.

1.1 WHEEL LUG NUTS

DADI FISSAGGIO / RADMUTTER
TUERCAS DE FIJACION / КОЛЕСНЫЕ ГАЙКИ

HEX **19** MM | CONE **60°** SEAT | HEIGHT **30** MM | **STAINLESS STEEL CAP**

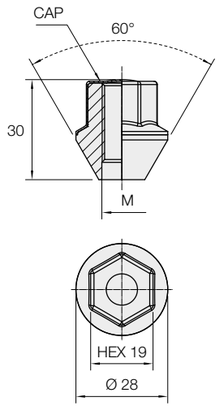

CLASS 10

Model code	Art.	Thread size	Hex	H	Finish	Stock
N19BCN30XA2	N1111	M 12 x 1.5	19	30	Zinc-Nickel	■

HEX **19** MM | CONE **60°** SEAT | HEIGHT **30** MM | **CLOSED**

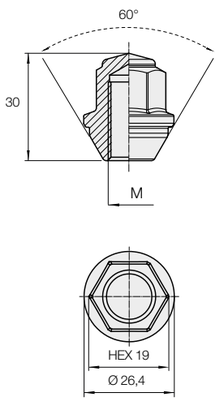

CLASS 10

Model code	Art.	Thread size	Hex	H	Finish	Stock
N19BCN30C	N1125	M 12 x 1.5	19	30	Galvanized	■

HEX **19** MM | CONE **60°** SEAT | HEIGHT **36** MM | **STAINLESS STEEL CAP**

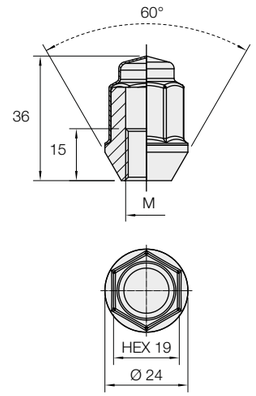

Model code	Art.	Thread size	Hex	H	Finish	Stock
N19BCN36X	N1100	M 12 x 1.5	19	36	Galvanized	■

HEX **19** MM | BALL **R12** SEAT | HEIGHT **27** MM | **STAINLESS STEEL CAP**

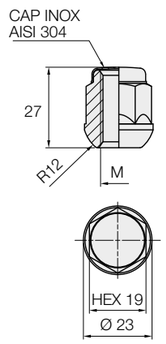

Model code	Art.	Thread size	Hex	H	Finish	Stock
N19AS227X	N325	M 12 x 1.25	19	27	Galvanized	■
N19BS227X	N326	M 12 x 1.5	19	27	Galvanized	■
N19CS227X	N327	M 12 x 1.75	19	27	Galvanized	■
N19ES227X	N328	M 14 x 1.5	19	27	Galvanized	■
N19GS227X	N329	M 14 x 2	19	27	Galvanized	■
N19JS227X	N330	3/8 UNF	19	27	Galvanized	■
N19IS227X	N331	7/16 UNF	19	27	Galvanized	■
N19HS227X	N332	1/2 UNF	19	27	Galvanized	■
N19KS227X	N333	9/16 UNF	19	27	Galvanized	■

■ May not be in stock - please enquire.

ELLIS EXCELLENCE IN WHEEL ACCESSORIES

1.1 WHEEL LUG NUTS

DADI FISSAGGIO / RADMUTTER
TUERCAS DE FIJACION / КОЛЕСНЫЕ ГАЙКИ

HEX	BALL	HEIGHT	
19 MM	R12 SEAT	27 MM	OPEN

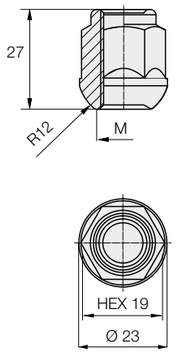

Model code	Art.	Thread size	Hex	H	Finish	Stock
N19AS2270ST0R	N325R	M 12 x 1.25	19	27	Copper	■
N19BS2270ST0R	N326R	M 12 x 1.5	19	27	Copper	■
N19ES2270ST0R	N328R	M 14 x 1.5	19	27	Copper	■

HEX	CONE	HEIGHT	
19 MM	VAR PCD SEAT	34 MM	CLOSED

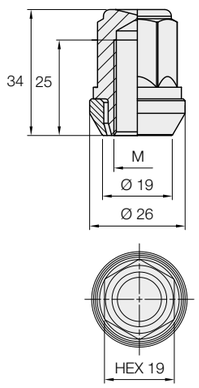

Model code	Art.	Thread size	Hex	H	Finish	Stock
N19AWV34C	N975	M 12 x 1.25	19	34	Galvanized	■
N19BWV34C	N976	M 12 x 1.5	19	34	Galvanized	■
N19HWV34C	N982	1/2 UNF	19	34	Galvanized	■

HEX	CONE	HEIGHT	
21 MM	60° SEAT	29 MM	CLOSED

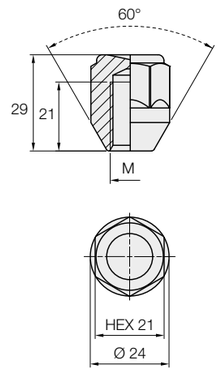

Model code	Art.	Thread size	Hex	H	Finish	Stock
N21ACN29C	N525	M 12 x 1.25	21	29	Galvanized	■
N21BCN29C	N526	M 12 x 1.5	21	29	Galvanized	■
N21CCN29C	N527	M 12 x 1.75	21	29	Galvanized	■
N21ECN29C	N528	M 14 x 1.5	21	29	Galvanized	■
N21GCN29C	N529	M 14 x 2	21	29	Galvanized	■
N21JCN29C	N530	3/8 UNF	21	29	Galvanized	■
N21ICN29C	N531	7/16 UNF	21	29	Galvanized	■
N21HCN29C	N532	1/2 UNF	21	29	Galvanized	■
N21KCN29C	N533	9/16 UNF	21	29	Galvanized	■

HEX	CONE	HEIGHT	
21 MM	60° SEAT	34 MM	CLOSED

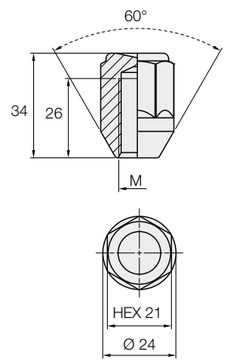

Model code	Art.	Thread size	Hex	H	Finish	Stock
N21ACN34C	N550	M 12 x 1.25	21	34	Galvanized	■
N21BCN34C	N551	M 12 x 1.5	21	34	Galvanized	■
N21CCN34C	N552	M 12 x 1.75	21	34	Galvanized	■
N21ECN34C	N553	M 14 x 1.5	21	34	Galvanized	■
N21GCN34C	N554	M 14 x 2	21	34	Galvanized	■
N21JCN34C	N555	3/8 UNF	21	34	Galvanized	■
N21ICN34C	N556	7/16 UNF	21	34	Galvanized	■
N21HCN34C	N557	1/2 UNF	21	34	Galvanized	■
N21KCN34C	N558	9/16 UNF	21	34	Galvanized	■

■ May not be in stock - please enquire.

ELLIS EXCELLENCE IN WHEEL ACCESSORIES

1.1 WHEEL LUG NUTS

DADI FISSAGGIO / RADMUTTER
TUERCAS DE FIJACION / КОЛЕСНЫЕ ГАЙКИ

HEX **21** MM | CONE **60°** SEAT | HEIGHT **34** MM | **CLOSED**

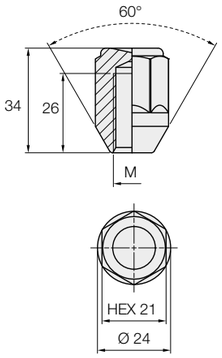

Model code	Art.	Thread size	Hex	H	Finish	Stock
N21BCN34CST08	N551B	M 12 x 1.5	21	34	Special Black	■
N21ECN34CST08	N553B	M 14 x 1.5	21	34	Special Black	■

HEX **21** MM | CONE **60°** WITH SHANK | HEIGHT **34** MM | **CLOSED**

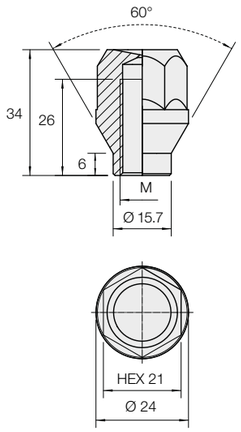

Model code	Art.	Thread size	Hex	H	Finish	Stock
N21ART34C	N575	M 12 x 1.25	21	34	Galvanized	■
N21BRT34C	N576	M 12 x 1.5	21	34	Galvanized	■
N21CRT34C	N577	M 12 x 1.75	21	34	Galvanized	■
N21ERT34C	N578	M 14 x 1.5	21	34	Galvanized	■
N21GRT34C	N579	M 14 x 2	21	34	Galvanized	■
N21JRT34C	N580	3/8 UNF	21	34	Galvanized	■
N21IRT34C	N581	7/16 UNF	21	34	Galvanized	■
N21HRT34C	N582	1/2 UNF	21	34	Galvanized	■
N21KRT34C	N583	9/16 UNF	21	34	Galvanized	■

HEX **21** MM | CONE **60°** SEAT | HEIGHT **16** MM | **OPEN**

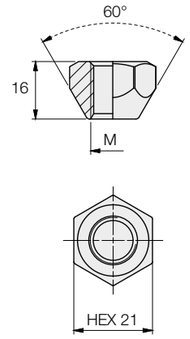

Model code	Art.	Thread size	Hex	H	Finish	Stock
N21ACN160	N475	M 12 x 1.25	21	16	Yellow galv.	■
N21BCN160	N476	M 12 x 1.5	21	16	Yellow galv.	■
N21CCN160	N477	M 12 x 1.75	21	16	Yellow galv.	■
N21ECN160	N478	M 14 x 1.5	21	16	Yellow galv.	■
N21GCN160	N479	M 14 x 2	21	16	Yellow galv.	■
N21JCN160	N480	3/8 UNF	21	16	Yellow galv.	■
N21ICN160	N481	7/16 UNF	21	16	Yellow galv.	■
N21HCN160	N482	1/2 UNF	21	16	Yellow galv.	■
N21KCN160	N483	9/16 UNF	21	16	Yellow galv.	■

HEX **21** MM | CONE **60°** SEAT | HEIGHT **17** MM | **OPEN**

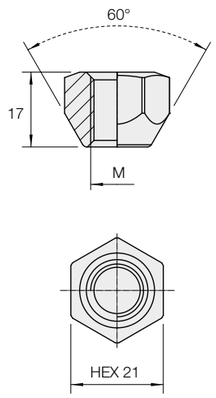

CLASS 10

Model code	Art.	Thread size	Hex	H	Finish	Stock
N21ECN170A0	N1112	M 14 x 1.5	21	17	Zinc-Nickel	■

■ May not be in stock - please enquire.

ELLIS EXCELLENCE IN WHEEL ACCESSORIES

1.1 WHEEL LUG NUTS

DADI FISSAGGIO / RADMUTTER
TUERCAS DE FIJACION / КОЛЕСНЫЕ ГАЙКИ

HEX **21** MM | CONE **60°** SEAT | HEIGHT **25** MM | **OPEN**

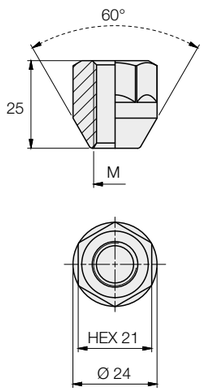

Model code	Art.	Thread size	Hex	H	Finish	Stock
N21ACN250	N450	M 12 x 1.25	21	25	Galvanized	■
N21BCN250	N451	M 12 x 1.5	21	25	Galvanized	■
N21CCN250	N452	M 12 x 1.75	21	25	Galvanized	■
N21ECN250	N453	M 14 x 1.5	21	25	Galvanized	■
N21GCN250	N454	M 14 x 2	21	25	Galvanized	■
N21JCN250	N455	3/8 UNF	21	25	Galvanized	■
N21ICN250	N456	7/16 UNF	21	25	Galvanized	■
N21HCN250	N457	1/2 UNF	21	25	Galvanized	■
N21KCN250	N458	9/16 UNF	21	25	Galvanized	■

HEX **21** MM | WASHER **FLAT** SEAT | HEIGHT **25** MM | **OPEN**

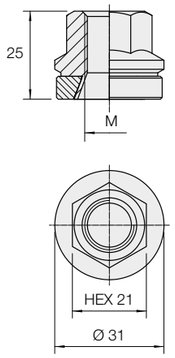

CLASS 10

Model code	Art.	Thread size	Hex	H	Finish	Stock
N21EWR25XA0	N1114	M 14 x 1.5	21	25	Zinc-Nickel	■

HEX **21** MM | CONE **60°** SEAT | HEIGHT **30** MM | **STAINLESS STEEL CAP**

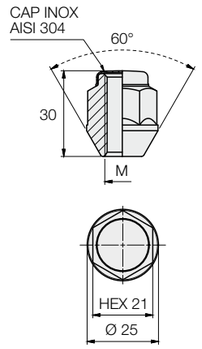

Model code	Art.	Thread size	Hex	H	Finish	Stock
N21ACN30X	N501	M 12 x 1.25	21	30	Galvanized	■
N21BCN30X	N500	M 12 x 1.5	21	30	Galvanized	■
N21CCN30X	N502	M 12 x 1.75	21	30	Galvanized	■
N21ECN30X	N503	M 14 x 1.5	21	30	Galvanized	■
N21GCN30X	N504	M 14 x 2	21	30	Galvanized	■
N21JCN30X	N505	3/8 UNF	21	30	Galvanized	■
N21ICN30X	N506	7/16 UNF	21	30	Galvanized	■
N21HCN30X	N507	1/2 UNF	21	30	Galvanized	■
N21KCN30X	N508	9/16 UNF	21	30	Galvanized	■

HEX **21** MM | CONE **60°** SEAT | HEIGHT **49** MM | **STAINLESS STEEL CAP**

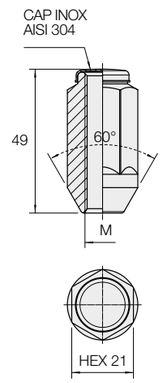

Model code	Art.	Thread size	Hex	H	Finish	Stock
N21ACN49X	N1025	M 12 x 1.25	21	49	Galvanized	■
N21BCN49X	N1026	M 12 x 1.5	21	49	Galvanized	■
N21CCN49X	N1027	M 12 x 1.75	21	49	Galvanized	■
N21ECN49X	N1028	M 14 x 1.5	21	49	Galvanized	■
N21GCN49X	N1029	M 14 x 2.0	21	49	Galvanized	■
N21HCN49X	N1030	1/2 UNF	21	49	Galvanized	■
N21ICN49X	N1031	7/16 UNF	21	49	Galvanized	■
N21KCN49X	N1032	9/16 UNF	21	49	Galvanized	■
N21JCN49X	N1033	3/8 UNF	21	49	Galvanized	■

■ May not be in stock - please enquire.

1.1 WHEEL LUG NUTS

DADI FISSAGGIO / RADMUTTER
TUERCAS DE FIJACION / КОЛЕСНЫЕ ГАЙКИ

HEX **21** MM | CONE **60°** SEAT | HEIGHT **34** MM | **STAINLESS STEEL CAP**

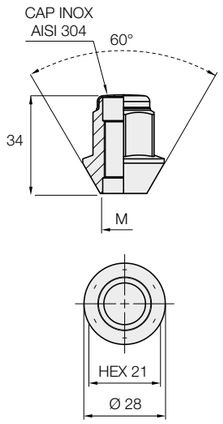

CLASS 10

Model code	Art.	Thread size	Hex	H	Finish	Stock
N21ECN34XA0	N513	M 14 x 1.5	21	34	Galvanized	■

HEX **21** MM | WASHER **60°** SEAT | HEIGHT **34** MM | **STAINLESS STEEL CAP**

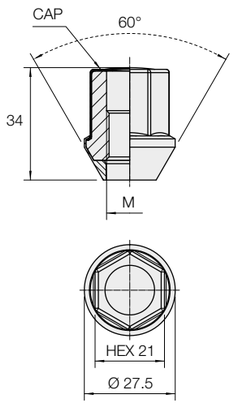

CLASS 10

Model code	Art.	Thread size	Hex	H	Finish	Stock
N21EWC34XA0	N1113	M 14 x 1.5	21	34	Galvanized	■

HEX **21** MM | CONE **60°** SEAT | HEIGHT **36.5** MM | **STAINLESS STEEL CAP**

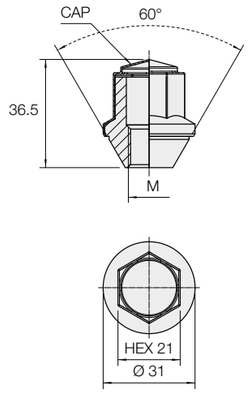

CLASS 10

Model code	Art.	Thread size	Hex	H	Finish	Stock
N21ECN36XA0	N1116	M 14 x 1.5	21	36.5	Zinc-Nickel	■

HEX **21** MM | CONE **60°** SEAT | HEIGHT **36** MM | **CLOSED**

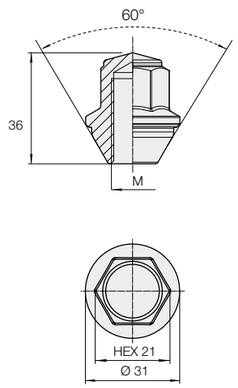

CLASS 10

Model code	Art.	Thread size	Hex	H	Finish	Stock
N21ECN36C	N1126	M 14 x 1.5	21	36	Galvanized	■

■ May not be in stock - please enquire.

1.1 WHEEL LUG NUTS

DADI FISSAGGIO / RADMUTTER
TUERCAS DE FIJACION / КОЛЕСНЫЕ ГАЙКИ

HEX **21** MM | CONE **60°** SEAT | HEIGHT **42.5** MM | **STAINLESS STEEL CAP**

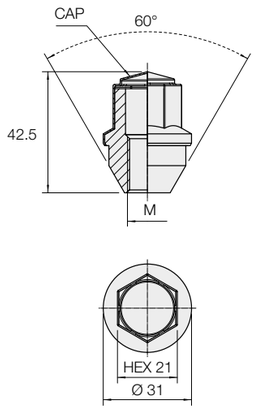

CLASS 10

Model code	Art.	Thread size	Hex	H	Finish	Stock
N21ECN42XA0	N1115	M 14 x 1.5	21	42.5	Zinc-Nickel	■

HEX **21** MM | CONE **60°** SEAT | HEIGHT **42** MM | **CLOSED**

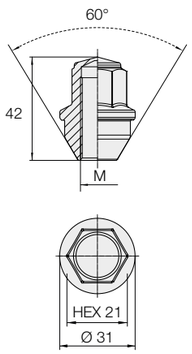

CLASS 10

Model code	Art.	Thread size	Hex	H	Finish	Stock
N21ECN42C	N1127	M 14 x 1.5	21	42	Galvanized	■

HEX **21** MM | CONE **60°** SEAT | HEIGHT **28** MM | **CLOSED**

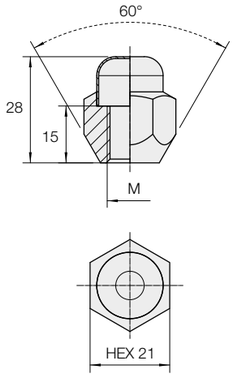

Model code	Art.	Thread size	Hex	H	Finish	Stock
N21BCN28CA0	N1117	M 12 x 1.5	21	28	Chrome plated	■

HEX **21** MM | CONE **60°** SEAT | HEIGHT **34** MM | **CLOSED**

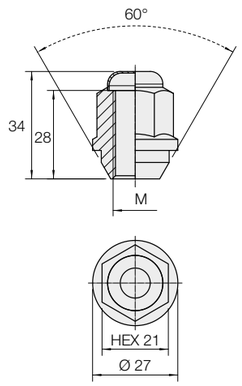

Model code	Art.	Thread size	Hex	H	Finish	Stock
N21BCN34CA0	N1118	M 12 x 1.5	21	34	Chrome plated	■

■ May not be in stock - please enquire.

1.1 WHEEL LUG NUTS

DADI FISSAGGIO / RADMUTTER
TUERCAS DE FIJACION / КОЛЕСНЫЕ ГАЙКИ

HEX **21** MM | WASHER **FLAT** SEAT | HEIGHT **37.5** MM | **CLOSED**

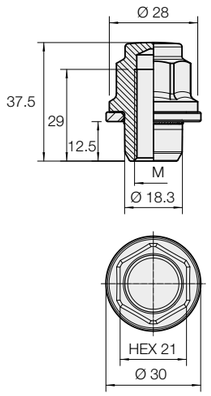

Model code	Art.	Thread size	Hex	H	Finish	Stock
N21BWR37C	N1000	M 12 x 1.5	21	37.5	Chrome plated	■

HEX **21** MM | WASHER **FLAT** SEAT | HEIGHT **37.5** MM | **CLOSED**

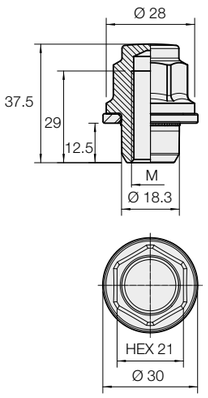

Model code	Art.	Thread size	Hex	H	Finish	Stock
N21BWR37CST01	SN1000	M 12 x 1.5	21	37.5	Galvanized	■

HEX **22** MM | CONE **60°** SEAT | HEIGHT **60** MM | **STAINLESS STEEL CAP**

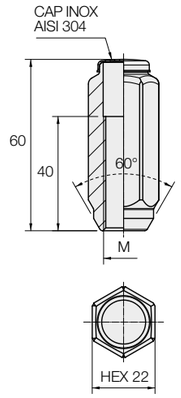

Model code	Art.	Thread size	Hex	H	Finish	Stock
N22ACN60X	N1050	M 12 x 1.25	22	60	Galvanized	■
N22BCN60X	N1051	M 12 x 1.5	22	60	Galvanized	■
N22CCN60X	N1052	M 12 x 1.75	22	60	Galvanized	■
N22ECN60X	N1053	M 14 x 1.5	22	60	Galvanized	■
N22GCN60X	N1054	M 14 x 2.0	22	60	Galvanized	■
N22JCN60X	N1055	3/8 UNF	22	60	Galvanized	■
N22ICN60X	N1056	7/16 UNF	22	60	Galvanized	■
N22HCN60X	N1057	1/2 UNF	22	60	Galvanized	■
N22KCN60X	N1058	9/16 UNF	22	60	Galvanized	■

HEX **22** MM | CONE **60°** SEAT | HEIGHT **75** MM | **STAINLESS STEEL CAP**

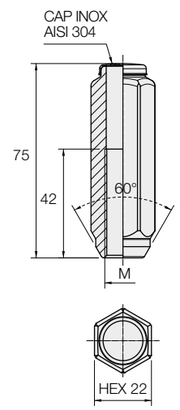

Model code	Art.	Thread size	Hex	H	Finish	Stock
N22ACN75X	N1060	M 12 x 1.25	22	75	Galvanized	■
N22BCN75X	N1061	M 12 x 1.5	22	75	Galvanized	■
N22CCN75X	N1062	M 12 x 1.75	22	75	Galvanized	■
N22ECN75X	N1063	M 14 x 1.5	22	75	Galvanized	■
N22GCN75X	N1064	M 14 x 2.0	22	75	Galvanized	■
N22HCN75X	N1065	1/2 UNF	22	75	Galvanized	■
N22ICN75X	N1066	7/16 UNF	22	75	Galvanized	■
N22JCN75X	N1067	3/8 UNF	22	75	Galvanized	■
N22KCN75X	N1068	9/16 UNF	22	75	Galvanized	■

■ May not be in stock - please enquire.

1.1 WHEEL LUG NUTS

DADI FISSAGGIO / RADMUTTER
TUERCAS DE FIJACION / КОЛЕСНЫЕ ГАЙКИ

HEX	WASHER	HEIGHT	
22 MM	FLAT SEAT	46.5 MM	CLOSED

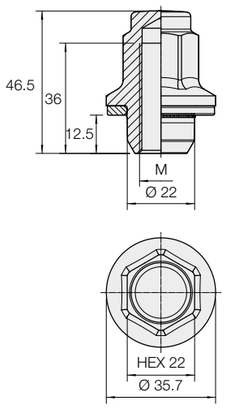

Model code	Art.	Thread size	Hex	H	Finish	Stock
N22EWR46C	N1010	M 14 x 1.5	22	46.5	Chrome plated	■

HEX	WASHER	HEIGHT	
22 MM	FLAT SEAT	47 MM	CLOSED

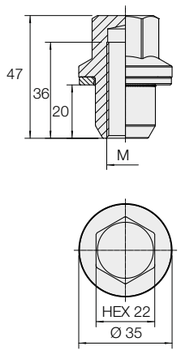

Model code	Art.	Thread size	Hex	H	Finish	Stock
N22EWR47C	N1120	M 14 x 1.5	22	47	Galvanized	■

HEX	WASHER	HEIGHT	
22 MM	FLAT SEAT	47 MM	CLOSED

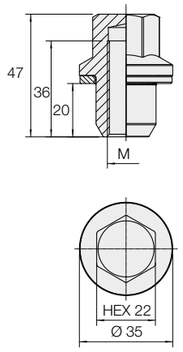

Model code	Art.	Thread size	Hex	H	Finish	Stock
N22EWR47CST08	N1120B	M 14 X 1.5	22	47	Special Black	■

HEX	WASHER	HEIGHT	
22 MM	FLAT SEAT	41 MM	CLOSED

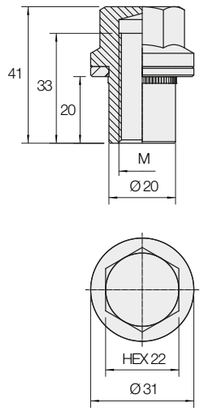

Model code	Art.	Thread size	Hex	H	Finish	Stock
N22EWR41C	N1122	M 14 x 1.5	22	41	Galvanized	■

■ May not be in stock - please enquire.

ELLIS EXCELLENCE IN WHEEL ACCESSORIES

1.1 WHEEL LUG NUTS

DADI FISSAGGIO / RADMUTTER
TUERCAS DE FIJACION / КОЛЕСНЫЕ ГАЙКИ

HEX	WASHER	HEIGHT	
27 MM	FLAT SEAT	53 MM	CLOSED

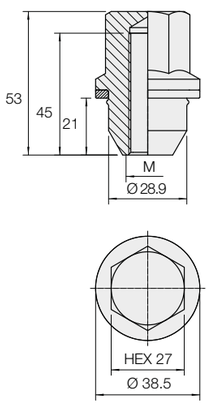

Model code	Art.	Thread size	Hex	H	Finish	Stock
N27EWR53C	N1121	M 14 x 1.5	27	53	Galvanized	■
N27LWR53C	N1119	M 16 x 1.5	27	53	Galvanized	■

1.2 TUNER LUG NUTS

DADI STELLARI / STERNSCHRAUBE
TUERCA RADIAL / МНОГОГРАННЫЕ ГАЙКИ

HEAD Ø	CONE	HEIGHT	
20 MM	60° SEAT	37 MM	OPEN

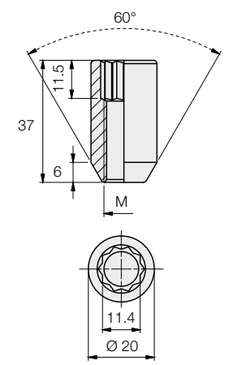

Model code	Art.	Thread size	Head Ø	H	Finish	Stock
NS0ACN370	N600	M 12 x 1.25	20 mm	37	Galvanized	■
NS0BCN370	N601	M 12 x 1.5	20 mm	37	Galvanized	■
NS0CCN370	N602	M 12 x 1.75	20 mm	37	Galvanized	■
NS0ECN370	N603	M 14 x 1.5	20 mm	37	Galvanized	■
NS0GCN370	N604	M 14 x 2	20 mm	37	Galvanized	■
NS0JCN370	N605	3/8 UNF	20 mm	37	Galvanized	■
NS0ICN370	N606	7/16 UNF	20 mm	37	Galvanized	■
NS0HCN370	N607	1/2 UNF	20 mm	37	Galvanized	■
NS0KCN370	N608	9/16 UNF	20 mm	37	Galvanized	■

HEAD Ø	CONE	HEIGHT	
20 MM	60° SEAT	37 MM	OPEN

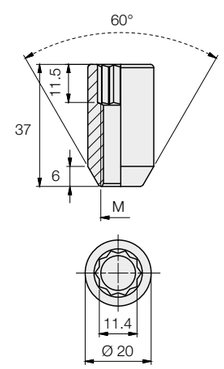

Model code	Art.	Thread size	Head Ø	H	Finish	Stock
NS0ACN370ST08	N600B	M 12 x 1.25	20 mm	37	Special Black	■
NS0BCN370ST08	N601B	M 12 x 1.5	20 mm	37	Special Black	■
NS0ECN370ST08	N603B	M 14 x 1.5	20 mm	37	Special Black	■
NS0HCN370ST08	N607B	1/2 UNF	20 mm	37	Special Black	■

■ May not be in stock - please enquire.

1.2 TUNER LUG NUTS

DADI STELLARI / STERNSCHRAUBE
TUERCA RADIAL / МНОГОГРАННЫЕ ГАЙКИ

HEAD Ø	CONE	HEIGHT	
21.6 MM	60° WITH SHANK	35 MM	OPEN

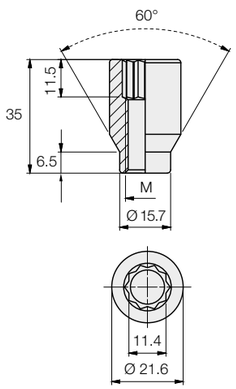

Model code	Art.	Thread size	Head Ø	H	Finish	Stock
NS5ART350	N675	M 12 x 1.25	21.6 mm	35	Galvanized	■
NS5BRT350	N676	M 12 x 1.5	21.6 mm	35	Galvanized	■
NS5CRT350	N677	M 12 x 1.75	21.6 mm	35	Galvanized	■
NS5ERT350	N678	M 14 x 1.5	21.6 mm	35	Galvanized	■
NS5GRT350	N679	M 14 x 2	21.6 mm	35	Galvanized	■
NS5JRT350	N680	3/8 UNF	21.6 mm	35	Galvanized	■
NS5IRT350	N681	7/16 UNF	21.6 mm	35	Galvanized	■
NS5HRT350	N682	1/2 UNF	21.6 mm	35	Galvanized	■
NS5KRT350	N683	9/16 UNF	21.6 mm	35	Galvanized	■

HEAD Ø	CONE	HEIGHT	
23 MM	60° SEAT	37 MM	OPEN

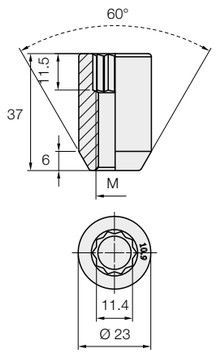

CLASS 10

Model code	Art.	Thread size	Head Ø	H	Finish	Stock
NS1ACN370	N625	M 12 x 1.25	23 mm	37	Galvanized	■
NS1BCN370	N626	M 12 x 1.5	23 mm	37	Galvanized	■
NS1CCN370	N627	M 12 x 1.75	23 mm	37	Galvanized	■
NS1ECN370	N628	M 14 x 1.5	23 mm	37	Galvanized	■
NS1GCN370	N629	M 14 x 2	23 mm	37	Galvanized	■
NS1JCN370	N630	3/8 UNF	23 mm	37	Galvanized	■
NS1ICN370	N631	7/16 UNF	23 mm	37	Galvanized	■
NS1HCN370	N632	1/2 UNF	23 mm	37	Galvanized	■
NS1KCN370	N633	9/16 UNF	23 mm	37	Galvanized	■

HEAD Ø	CONE	HEIGHT	
23 MM	60° SEAT	45 MM	OPEN

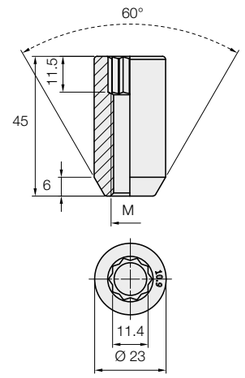

CLASS 10

Model code	Art.	Thread size	Head Ø	H	Finish	Stock
NS1ACN450	N650	M 12 x 1.25	23 mm	45	Galvanized	■
NS1BCN450	N651	M 12 x 1.5	23 mm	45	Galvanized	■
NS1CCN450	N652	M 12 x 1.75	23 mm	45	Galvanized	■
NS1ECN450	N653	M 14 x 1.5	23 mm	45	Galvanized	■
NS1GCN450	N654	M 14 x 2	23 mm	45	Galvanized	■
NS1JCN450	N655	3/8 UNF	23 mm	45	Galvanized	■
NS1ICN450	N656	7/16 UNF	23 mm	45	Galvanized	■
NS1HCN450	N657	1/2 UNF	23 mm	45	Galvanized	■
NS1KCN450	N658	9/16 UNF	23 mm	45	Galvanized	■

■ May not be in stock - please enquire.

ELLIS®
EXCELLENCE
IN WHEEL ACCESSORIES

1.3 TUNER LUG NUT ADAPTOR

ADATTATORE DADI STELLARI / STERNADAPTORMUTTER
ADAPTOR DE TUERCA RADIALES / АДАПТОР К МНОГОГРАННЫМ ГАЙКАМ

TUNER LUG NUT ADAPTOR

HEIGHT
70
MM

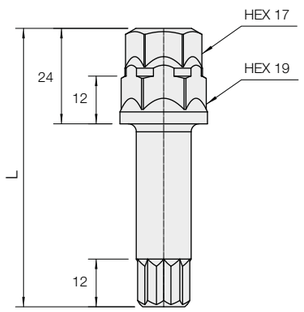

CLASS 10.9

Model code	Art.	Hex 1	Hex 2	L	Stock
AST171970	A101	17 mm	19 mm	70 mm	■

ELLIS
EXCELLENCE
IN WHEEL ACCESSORIES

"What's behind you doesn't matter."
Enzo Ferrari

WHEEL LUG BOLTS

2.1 WHEEL LUG BOLTS
2.2 TUNER LUG BOLTS
2.3 TUNER LUG BOLT ADAPTOR

ELLIS EXCELLENCE IN WHEEL ACCESSORIES

2.1 WHEEL LUG BOLTS

VITE FISSAGGIO / RADSCHRAUBE
TORNILLO DE FIJACION / КРЕПЕЖНЫЙ БОЛТ

HEX **17** MM | CONE **60°** SEAT | THREAD **M12x1.25** SIZE

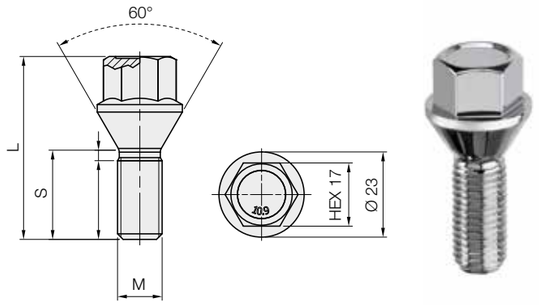

CLASS 10.9

Model code	Art.	Thread size	Hex	S	L	Finish	Stock
B17ACN22	B140	M 12 x 1.25	17	22	47.2	Galvanized	■
B17ACN24	B125	M 12 x 1.25	17	24	49.2	Galvanized	■
B17ACN26	B126	M 12 x 1.25	17	26	51.2	Galvanized	■
B17ACN28	B127	M 12 x 1.25	17	28	53.3	Galvanized	■
B17ACN30	B128	M 12 x 1.25	17	30	55.3	Galvanized	■
B17ACN32	B129	M 12 x 1.25	17	32	57.3	Galvanized	■
B17ACN34	B130	M 12 x 1.25	17	34	59.3	Galvanized	■
B17ACN36	B131	M 12 x 1.25	17	36	61.3	Galvanized	■
B17ACN38	B139	M 12 x 1.25	17	38	63.3	Galvanized	■
B17ACN39	B132	M 12 x 1.25	17	39	64.3	Galvanized	■
B17ACN42	B133	M 12 x 1.25	17	42	67.3	Galvanized	■
B17ACN45	B134	M 12 x 1.25	17	45	70.3	Galvanized	■
B17ACN46	B135	M 12 x 1.25	17	46	71.3	Galvanized	■
B17ACN50	B136	M 12 x 1.25	17	50	75.3	Galvanized	■
B17ACN55	B137	M 12 x 1.25	17	55	80.3	Galvanized	■
B17ACN60	B138	M 12 x 1.25	17	60	85.3	Galvanized	■

HEX **17** MM | CONE **60°** SEAT | THREAD **M12x1.25** SIZE

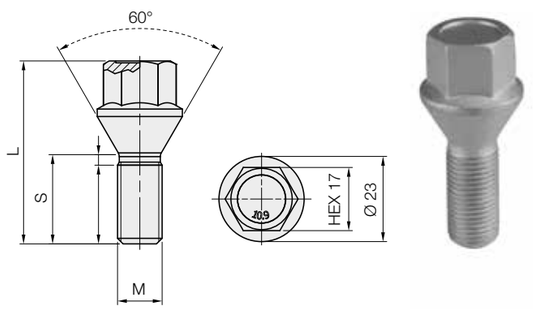

CLASS 10.9

Model code	Art.	Thread size	Hex	S	L	Finish	Stock
B17ACN22ST27	B140G	M 12 x 1.25	17	22	47.2	Geomet	■
B17ACN24ST27	B125G	M 12 x 1.25	17	24	49.2	Geomet	■
B17ACN38ST27	B139G	M 12 x 1.25	17	38	63.3	Geomet	■

HEX **17** MM | CONE **60°** SEAT | THREAD **M12x1.25** SIZE

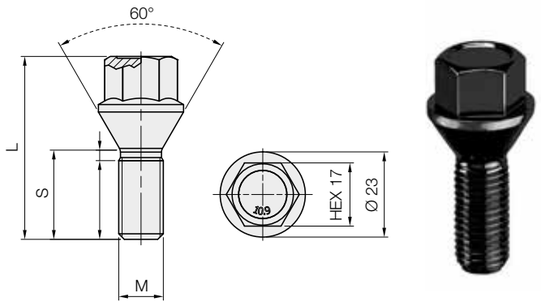

CLASS 10.9

Model code	Art.	Thread size	Hex	S	L	Finish	Stock
B17ACN24ST23	B125B	M 12 x 1.25	17	24	49.2	Special Black	■
B17ACN26ST23	B126B	M 12 x 1.25	17	26	51.2	Special black	■
B17ACN28ST23	B127B	M 12 x 1.25	17	28	53.3	Special black	■
B17ACN30ST23	B128B	M 12 x 1.25	17	30	55.3	Special black	■
B17ACN32ST23	B129B	M 12 x 1.25	17	32	57.3	Special black	■
B17ACN34ST23	B130B	M 12 x 1.25	17	34	59.3	Special black	■
B17ACN36ST23	B131B	M 12 x 1.25	17	36	61.3	Special black	■
B17ACN39ST23	B132B	M 12 x 1.25	17	39	64.3	Special black	■
B17ACN42ST23	B133B	M 12 x 1.25	17	42	67.3	Special black	■
B17ACN45ST23	B134B	M 12 x 1.25	17	45	70.3	Special black	■
B17ACN46ST23	B135B	M 12 x 1.25	17	46	71.3	Special black	■
B17ACN50ST23	B136B	M 12 x 1.25	17	50	75.3	Special black	■
B17ACN55ST23	B137B	M 12 x 1.25	17	55	80.3	Special black	■
B17ACN60ST23	B138B	M 12 x 1.25	17	60	85.3	Special black	■

HEX **17** MM | CONE **60°** SEAT | THREAD **M12x1.5** SIZE

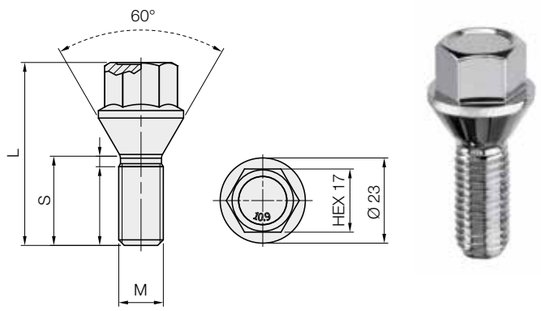

CLASS 10.9

Model code	Art.	Thread size	Hex	S	L	Finish	Stock
B17BCN21	B100	M 12 x 1.5	17	21	46.5	Galvanized	■
B17BCN22	B101	M 12 x 1.5	17	22	47.5	Galvanized	■
B17BCN24	B102	M 12 x 1.5	17	24	49.5	Galvanized	■
B17BCN26	B103	M 12 x 1.5	17	26	51.5	Galvanized	■
B17BCN28	B104	M 12 x 1.5	17	28	53.5	Galvanized	■
B17BCN30	B105	M 12 x 1.5	17	30	55.5	Galvanized	■
B17BCN32	B106	M 12 x 1.5	17	32	57.5	Galvanized	■
B17BCN35	B107	M 12 x 1.5	17	35	60.5	Galvanized	■
B17BCN37	B108	M 12 x 1.5	17	37	62.5	Galvanized	■
B17BCN39	B109	M 12 x 1.5	17	39	64.5	Galvanized	■
B17BCN42	B110	M 12 x 1.5	17	42	67.5	Galvanized	■
B17BCN43	B111	M 12 x 1.5	17	43	68.5	Galvanized	■
B17BCN45	B112	M 12 x 1.5	17	45	70.5	Galvanized	■
B17BCN47	B113	M 12 x 1.5	17	47	72.5	Galvanized	■
B17BCN50	B114	M 12 x 1.5	17	50	75.5	Galvanized	■
B17BCN55	B115	M 12 x 1.5	17	55	80.5	Galvanized	■
B17BCN60	B116	M 12 x 1.5	17	60	85.5	Galvanized	■

■ May not be in stock - please enquire.

2.1 WHEEL LUG BOLTS

VITE FISSAGGIO / RADSCHRAUBE
TORNILLO DE FIJACION / КРЕПЕЖНЫЙ БОЛТ

HEX **17** MM | CONE **60°** SEAT | THREAD **M12x1.5** SIZE

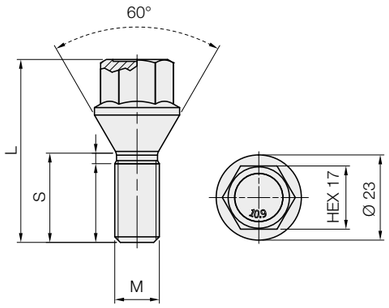

CLASS 10.9

Model code	Art.	Thread size	Hex	S	L	Finish	Stock
B17BCN37ST27	B108G	M 12 x 1.5	17	37	62.5	Geomet	■

HEX **17** MM | CONE **60°** SEAT | THREAD **M12x1.5** SIZE

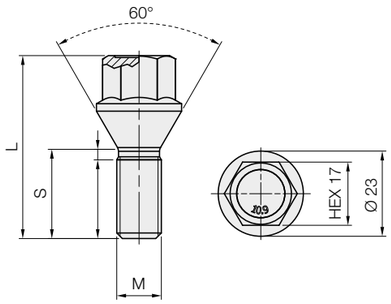

CLASS 10.9

Model code	Art.	Thread size	Hex	S	L	Finish	Stock
B17BCN22ST23	B101B	M 12 x 1.5	17	22	47.5	Special Black	■
B17BCN24ST23	B102B	M 12 x 1.5	17	24	49.5	Special Black	■
B17BCN26ST23	B103B	M 12 x 1.5	17	26	51.5	Special Black	■
B17BCN28ST23	B104B	M 12 x 1.5	17	28	53.5	Special Black	■
B17BCN30ST23	B105B	M 12 x 1.5	17	30	55.5	Special Black	■
B17BCN32ST23	B106B	M 12 x 1.5	17	32	57.5	Special Black	■
B17BCN35ST23	B107B	M 12 x 1.5	17	35	60.5	Special Black	■
B17BCN37ST23	B108B	M 12 x 1.5	17	37	62.5	Special Black	■
B17BCN39ST23	B109B	M 12 x 1.5	17	39	64.5	Special Black	■
B17BCN42ST23	B110B	M 12 x 1.5	17	42	67.5	Special Black	■
B17BCN43ST23	B111B	M 12 x 1.5	17	43	68.5	Special Black	■
B17BCN45ST23	B112B	M 12 x 1.5	17	45	70.5	Special Black	■
B17BCN47ST23	B113B	M 12 x 1.5	17	47	72.5	Special Black	■
B17BCN50ST23	B114B	M 12 x 1.5	17	50	75.5	Special Black	■
B17BCN55ST23	B115B	M 12 x 1.5	17	55	80.5	Special Black	■
B17BCN60ST23	B116B	M 12 x 1.5	17	60	85.5	Special Black	■

HEX **17** MM | CONE **60°** SEAT | THREAD **M12x1.5** SIZE

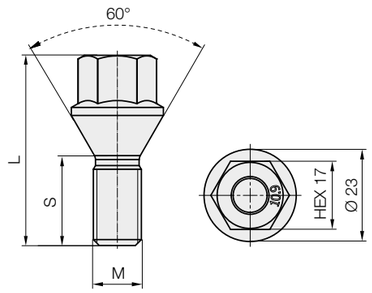

CLASS 10.9

Model code	Art.	Thread size	Hex	S	L	Finish	Stock
B17BCN22TF	B120	M 12 x 1.5	17	22	47.5	Galvanized	■

HEX **17** MM | CONE **60°** SEAT | THREAD **M14x1.25** SIZE

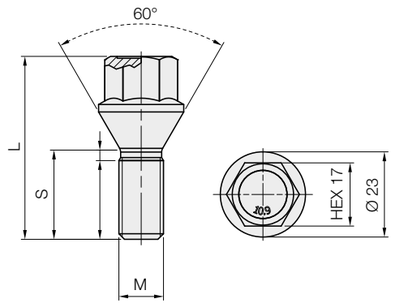

CLASS 10.9

Model code	Art.	Thread size	Hex	S	L	Finish	Stock
B17DCN28	B175	M 14 x 1.25	17	28	51	Galvanized	■
B17DCN30	B183	M 14 x 1.25	17	30	53	Galvanized	■
B17DCN33	B176	M 14 x 1.25	17	33	56.5	Galvanized	■
B17DCN35	B177	M 14 x 1.25	17	35	58.6	Galvanized	■
B17DCN38	B178	M 14 x 1.25	17	38	61.5	Galvanized	■
B17DCN40	B179	M 14 x 1.25	17	40	63.5	Galvanized	■
B17DCN43	B180	M 14 x 1.25	17	43	66.5	Galvanized	■
B17DCN45	B184	M 14 x 1.25	17	45	68.6	Galvanized	■
B17DCN47	B182	M 14 x 1.25	17	47	70.6	Galvanized	■
B17DCN50	B181	M 14 x 1.25	17	50	73.5	Galvanized	■

■ May not be in stock - please enquire.

ELLIS EXCELLENCE IN WHEEL ACCESSORIES

2.1 WHEEL LUG BOLTS

VITE FISSAGGIO / RADSCHRAUBE
TORNILLO DE FIJACION / КРЕПЕЖНЫЙ БОЛТ

HEX	CONE	THREAD
17 MM	60° SEAT	M14x1.25 SIZE

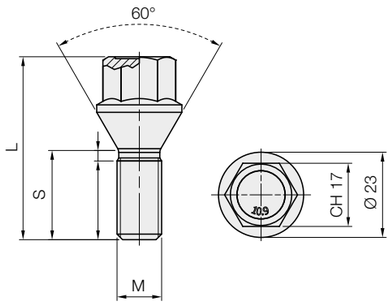

CLASS 10.9

Model code	Art.	Thread size	Hex	S	L	Finish	Stock
B17DCN25ST23	B187B	M 14 x 1.25	17	25	48	Special black	■
B17DCN28ST23	B175B	M 14 x 1.25	17	28	51	Special Black	■
B17DCN30ST23	B183B	M 14 x 1.25	17	30	53	Special Black	■
B17DCN33ST23	B176B	M 14 x 1.25	17	33	56.5	Special Black	■
B17DCN35ST23	B177B	M 14 x 1.25	17	35	58.6	Special Black	■
B17DCN38ST23	B178B	M 14 x 1.25	17	38	61.5	Special Black	■
B17DCN40ST23	B179B	M 14 x 1.25	17	40	63.5	Special Black	■
B17DCN43ST23	B180B	M 14 x 1.25	17	43	66.5	Special Black	■
B17DCN45ST23	B184B	M 14 x 1.25	17	45	68.6	Special black	■
B17DCN47ST23	B182B	M 14 x 1.25	17	47	70.6	Special black	■
B17DCN50ST23	B181B	M 14 x 1.25	17	50	73.5	Special Black	■
B17DCN60ST23	B186B	M 14 x 1.25	17	60	83.5	Special black	■

HEX	CONE	THREAD
17 MM	60° SEAT	M14x1.25 SIZE

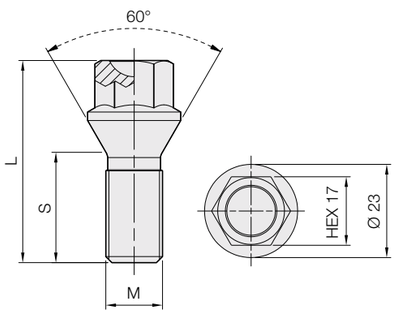

CLASS 10.9

Model code	Art.	Thread size	Hex	S	L	Finish	Stock
B17DCN27SC	B185	M 14 x 1.25	17	27	48.5	Special Black	■

HEX	CONE	THREAD
17 MM	60° SEAT	M14x1.5 SIZE

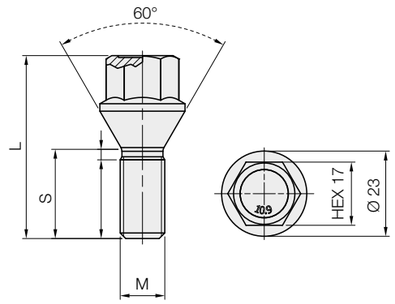

CLASS 10.9

Model code	Art.	Thread size	Hex	S	L	Finish	Stock
B17ECN20	B150	M 14 x 1.5	17	20	43.5	Galvanized	■
B17ECN25	B151	M 14 x 1.5	17	25	48.5	Galvanized	■
B17ECN27	B152	M 14 x 1.5	17	27	51	Galvanized	■
B17ECN28	B153	M 14 x 1.5	17	28	52	Galvanized	■
B17ECN30	B154	M 14 x 1.5	17	30	53.5	Galvanized	■
B17ECN33	B155	M 14 x 1.5	17	33	56.7	Galvanized	■
B17ECN35	B156	M 14 x 1.5	17	35	58.7	Galvanized	■
B17ECN38	B157	M 14 x 1.5	17	38	61.7	Galvanized	■
B17ECN40	B158	M 14 x 1.5	17	40	63.5	Galvanized	■
B17ECN43	B159	M 14 x 1.5	17	43	67	Galvanized	■
B17ECN45	B160	M 14 x 1.5	17	45	69	Galvanized	■
B17ECN47	B161	M 14 x 1.5	17	47	71	Galvanized	■
B17ECN50	B162	M 14 x 1.5	17	50	74	Galvanized	■
B17ECN55	B163	M 14 x 1.5	17	55	79	Galvanized	■
B17ECN60	B164	M 14 x 1.5	17	60	84	Galvanized	■

HEX	CONE	THREAD
17 MM	60° SEAT	M14x1.5 SIZE

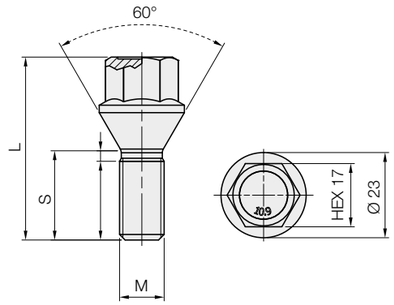

CLASS 10.9

Model code	Art.	Thread size	Hex	S	L	Finish	Stock
B17ECN25ST27	B151G	M 14 x 1.5	17	25	48.5	Geomet	■
B17ECN28ST27	B153G	M 14 x 1.5	17	28	52	Geomet	■

■ May not be in stock - please enquire.

ELLIS EXCELLENCE IN WHEEL ACCESSORIES

2.1 WHEEL LUG BOLTS

VITE FISSAGGIO / RADSCHRAUBE
TORNILLO DE FIJACION / КРЕПЕЖНЫЙ БОЛТ

HEX **17** MM | CONE **60°** SEAT | THREAD **M14x1.5** SIZE

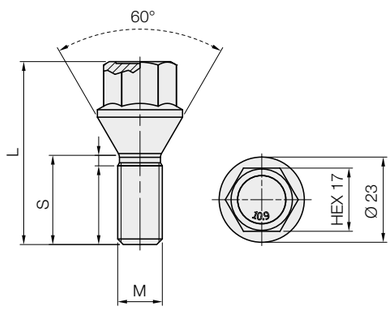

CLASS 10.9

Model code	Art.	Thread size	Hex	S	L	Finish	Stock
B17ECN25ST23	B151B	M 14 x 1.5	17	25	48.5	Special Black	■
B17ECN28ST23	B153B	M 14 x 1.5	17	28	52	Special Black	■
B17ECN30ST23	B154B	M 14 x 1.5	17	30	53.5	Special Black	■
B17ECN33ST23	B155B	M 14 x 1.5	17	33	56.7	Special Black	■
B17ECN35ST23	B156B	M 14 x 1.5	17	35	58.7	Special Black	■
B17ECN38ST23	B157B	M 14 x 1.5	17	38	61.7	Special Black	■
B17ECN40ST23	B158B	M 14 x 1.5	17	40	63.5	Special Black	■
B17ECN43ST23	B159B	M 14 x 1.5	17	43	67	Special Black	■
B17ECN45ST23	B160B	M 14 x 1.5	17	45	69	Special Black	■
B17ECN47ST23	B161B	M 14 x 1.5	17	47	71	Special black	■
B17ECN50ST23	B162B	M 14 x 1.5	17	50	74	Special Black	■
B17ECN55ST23	B163B	M 14 x 1.5	17	55	79	Special Black	■
B17ECN60ST23	B164B	M 14 x 1.5	17	60	84	Special black	■

HEX **17** MM | CONE **60°** SEAT | THREAD **M12x1.25** SIZE

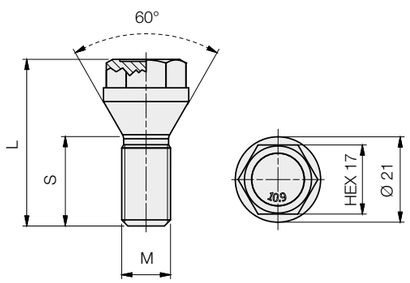

CLASS 10.9

Model code	Art.	Thread size	Hex	S	L	Finish	Stock
B17ACN22TB	B255	M 12 x 1.25	17	22	40	Galvanized	■

HEX **17** MM | CONE **60°** SEAT | THREAD **M12x1.5** SIZE

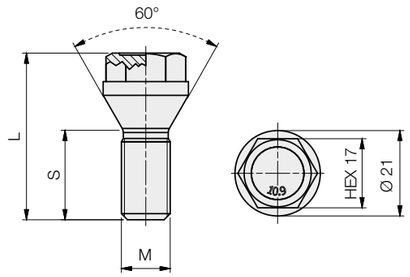

CLASS 10.9

Model code	Art.	Thread size	Hex	S	L	Finish	Stock
B17BCN19TB	B200	M 12 x 1.5	17	19	35	Galvanized	■
B17BCN21TB	B201	M 12 x 1.5	17	21	37.5	Galvanized	■
B17BCN26TB	B203	M 12 x 1.5	17	26	42.5	Galvanized	■

HEX **17** MM | CONE **60°** SEAT | THREAD **M12x1.75** SIZE

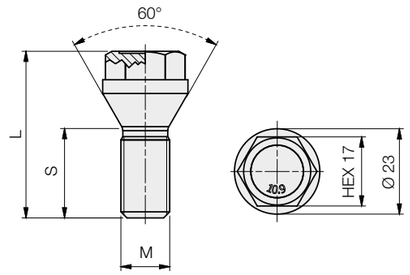

CLASS 10.9

Model code	Art.	Thread size	Hex	S	L	Finish	Stock
B17CCN19TB	B250	M 12 x 1.75	17	19	37.5	Galvanized	■
B17CCN24TB	B251	M 12 x 1.75	17	24	42.5	Galvanized	■

■ May not be in stock - please enquire.

2.1 WHEEL LUG BOLTS

VITE FISSAGGIO / RADSCHRAUBE
TORNILLO DE FIJACION / КРЕПЕЖНЫЙ БОЛТ

HEX **17** MM | CONE **60°** SEAT | THREAD **M14x1.5** SIZE

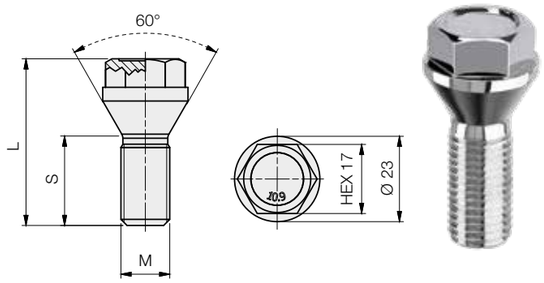

Model code	Art.	Thread size	Hex	S	L	Finish	Stock
B17ECN19TB	B225	M 14 x 1.5	17	19	35.5	Galvanized	■
B17ECN21TB	B226	M 14 x 1.5	17	21	37.5	Galvanized	■
B17ECN23TB	B227	M 14 x 1.5	17	23	39.8	Galvanized	■
B17ECN26TB	B228	M 14 x 1.5	17	26	42.5	Galvanized	■
B17ECN28TB	B229	M 14 x 1.5	17	28	44.8	Galvanized	■

CLASS 10.9

HEX **17** MM | CONE **60°** SEAT | THREAD **M14x1.5** SIZE

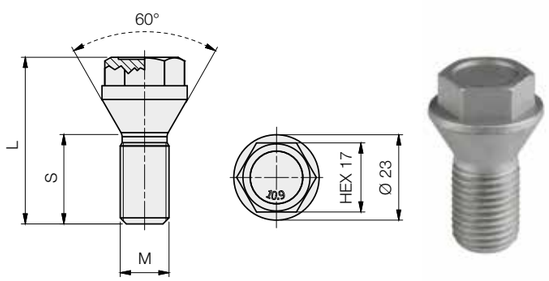

Model code	Art.	Thread size	Hex	S	L	Finish	Stock
B17ECN21TB27	B226G	M 14 x 1.5	17	21	37.5	Geomet	■
B17ECN23TB27	B227G	M 14 x 1.5	17	23	39.8	Geomet	■
B17ECN26TB27	B228G	M 14 x 1.5	17	26	42.5	Geomet	■
B17ECN30TB27	B230G	M 14 x 1.5	17	30	46.8	Geomet	■
B17ECN35TB27	B232G	M 14 x 1.5	17	35	41.8	Geomet	■

CLASS 10.9

HEX **17** MM | CONE **60°** SEAT | THREAD **M12x1.25** SIZE

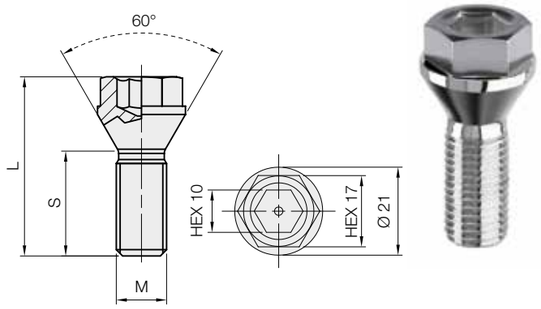

Model code	Art.	Thread size	Hex	S	L	Finish	Stock
B17ACN22EI	B260	M 12 x 1.25	17	22	39	Galvanized	■

CLASS 10.9

HEX **17** MM | CONE **60°** SEAT | THREAD **M12x1.5** SIZE

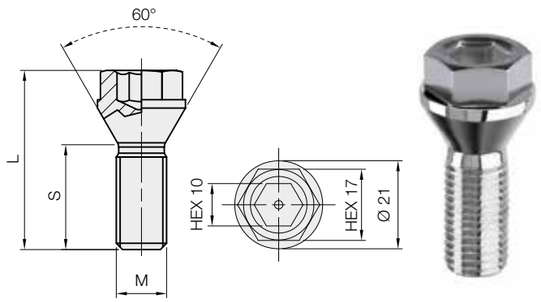

Model code	Art.	Thread size	Hex	S	L	Finish	Stock
B17BCN19EI	B210	M 12 x 1.5	17	19	35.7	Galvanized	■

CLASS 10.9

■ May not be in stock - please enquire.

2.1 WHEEL LUG BOLTS

VITE FISSAGGIO / RADSCHRAUBE
TORNILLO DE FIJACION / КРЕПЕЖНЫЙ БОЛТ

HEX	CONE	THREAD
17 MM	60° SEAT	M14x1.25 SIZE

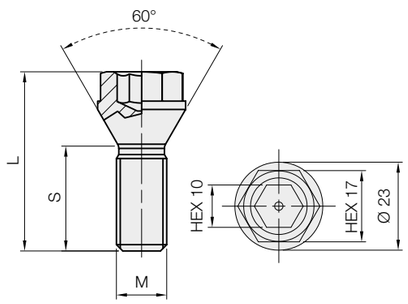

CLASS 10.9

Model code	Art.	Thread size	Hex	S	L	Finish	Stock
B17DCN21EI	B241	M 14 x 1.25	17	21	38.6	Galvanized	■
B17DCN23EI	B240	M 14 x 1.25	17	23	40.8	Galvanized	■

HEX	CONE	THREAD
17 MM	60° SEAT	M14x1.5 SIZE

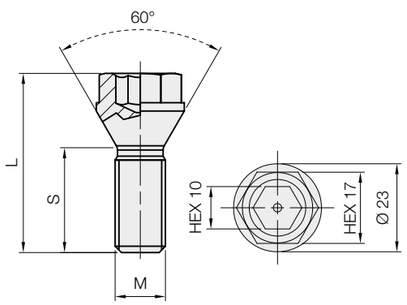

CLASS 10.9

Model code	Art.	Thread size	Hex	S	L	Finish	Stock
B17ECN23EI	B235	M 14 x 1.5	17	23	39.9	Galvanized	■
B17ECN26EI	B236	M 14 x 1.5	17	26	42.8	Galvanized	■

HEX	BALL	THREAD
17 MM	R12 SEAT	M12x1.5 SIZE

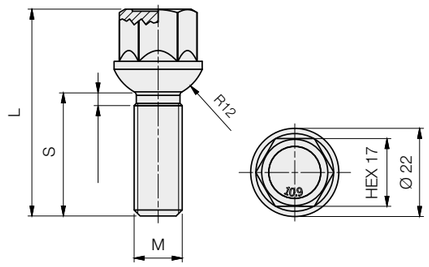

CLASS 10.9

Model code	Art.	Thread size	Hex	S	L	Finish	Stock
B17BS221	B525	M 12 x 1.5	17	21	41.6	Galvanized	■
B17BS223	B526	M 12 x 1.5	17	23	43.6	Galvanized	■
B17BS226	B527	M 12 x 1.5	17	26	46.6	Galvanized	■
B17BS228	B528	M 12 x 1.5	17	28	48.6	Galvanized	■
B17BS230	B529	M 12 x 1.5	17	30	50.6	Galvanized	■
B17BS232	B530	M 12 x 1.5	17	32	52.6	Galvanized	■
B17BS235	B531	M 12 x 1.5	17	35	55.6	Galvanized	■
B17BS240	B532	M 12 x 1.5	17	40	60.6	Galvanized	■
B17BS245	B533	M 12 x 1.5	17	45	65.6	Galvanized	■
B17BS250	B534	M 12 x 1.5	17	50	70.6	Galvanized	■
B17BS255	B535	M 12 x 1.5	17	55	75.6	Galvanized	■
B17BS260	B536	M 12 x 1.5	17	60	80.6	Galvanized	■

HEX	BALL	THREAD
17 MM	R12 SEAT	M12x1.5 SIZE

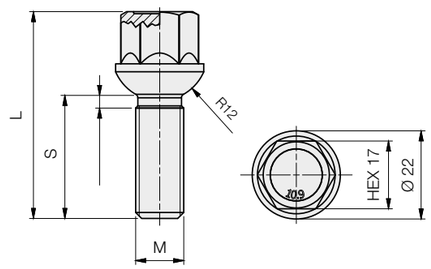

CLASS 10.9

Model code	Art.	Thread size	Hex	S	L	Finish	Stock
B17BS226ST23	B527B	M 12 x 1.5	17	26	46.6	Special black	■
B17BS228ST23	B528B	M 12 x 1.5	17	28	48.6	Special black	■
B17BS230ST23	B529B	M 12 x 1.5	17	30	50.6	Special Black	■
B17BS232ST23	B530B	M 12 x 1.5	17	32	52.6	Special black	■
B17BS235ST23	B531B	M 12 x 1.5	17	35	55.6	Special Black	■
B17BS240ST23	B532B	M 12 x 1.5	17	40	60.6	Special Black	■
B17BS245ST23	B533B	M 12 x 1.5	17	45	65.6	Special Black	■
B17BS250ST23	B534B	M 12 x 1.5	17	50	70.6	Special black	■
B17BS255ST23	B535B	M 12 x 1.5	17	55	75.6	Special Black	■
B17BS260ST23	B536B	M 12 x 1.5	17	60	80.6	Special Black	■

■ May not be in stock - please enquire.

ELLIS EXCELLENCE IN WHEEL ACCESSORIES

2.1 WHEEL LUG BOLTS

VITE FISSAGGIO / RADSCHRAUBE
TORNILLO DE FIJACION / КРЕПЕЖНЫЙ БОЛТ

HEX	BALL	THREAD
17 MM	R12 SEAT	M12x1.5 SIZE

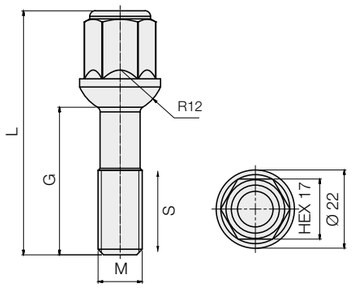

CLASS 10.9

Model code	Art.	Thread size	Hex	S	G	L	Finish	Stock
B17BS240TL	B775	M 12 x 1.5	17	23.5	40	66.3	Galvanized	■

HEX	BALL	THREAD
17 MM	R12 SEAT	M14x1.25 SIZE

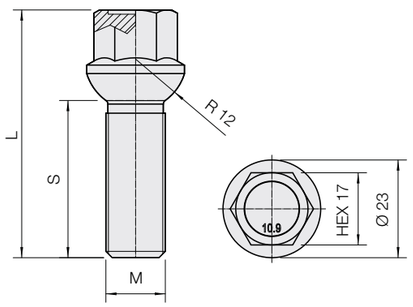

CLASS 10.9

Model code	Art.	Thread size	Hex	S	L	Finish	Stock
B17DS237	B1331	M 14 x 1.25	17	37	58.3	Galvanized	■
B17DS239	B1332	M 14 x 1.25	17	39	60.3	Galvanized	■

HEX	BALL	THREAD
17 MM	R12 SEAT	M14x1.5 SIZE

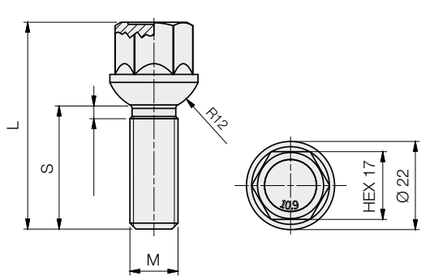

CLASS 10.9

Model code	Art.	Thread size	Hex	S	L	Finish	Stock
B17ES227	B550	M 14 x 1.5	17	27	47	Galvanized	■
B17ES230	B551	M 14 x 1.5	17	30	50	Galvanized	■
B17ES232	B565	M 14 x 1.5	17	32	52	Galvanized	■
B17ES235	B552	M 14 x 1.5	17	35	55	Galvanized	■
B17ES237	B553	M 14 x 1.5	17	37	57	Galvanized	■
B17ES238	B554	M 14 x 1.5	17	38	58	Galvanized	■
B17ES240	B555	M 14 x 1.5	17	40	60	Galvanized	■
B17ES245	B556	M 14 x 1.5	17	45	65	Galvanized	■
B17ES247	B557	M 14 x 1.5	17	47	67	Galvanized	■
B17ES248	B558	M 14 x 1.5	17	48	68	Galvanized	■
B17ES250	B559	M 14 x 1.5	17	50	70	Galvanized	■
B17ES252	B560	M 14 x 1.5	17	52	72	Galvanized	■
B17ES255	B561	M 14 x 1.5	17	55	76	Galvanized	■
B17ES259	B562	M 14 x 1.5	17	59	79	Galvanized	■
B17ES260	B563	M 14 x 1.5	17	60	80	Galvanized	■
B17ES264	B564	M 14 x 1.5	17	64	84	Galvanized	■

HEX	BALL	THREAD
17 MM	R12 SEAT	M14x1.5 SIZE

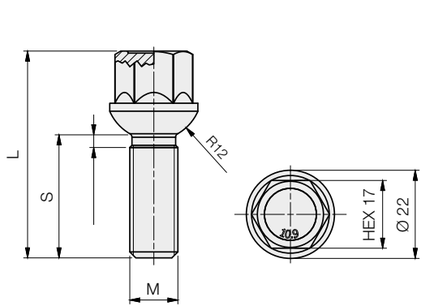

CLASS 10.9

Model code	Art.	Thread size	Hex	S	L	Finish	Stock
B17ES227ST23	B550B	M 14 x 1.5	17	27	47	Special Black	■
B17ES230ST23	B551B	M 14 x 1.5	17	30	50	Special Black	■
B17ES235ST23	B552B	M 14 x 1.5	17	35	55	Special Black	■
B17ES237ST23	B553B	M 14 x 1.5	17	37	57	Special black	■
B17ES238ST23	B554B	M 14 x 1.5	17	38	58	Special Black	■
B17ES240ST23	B555B	M 14 x 1.5	17	40	60	Special Black	■
B17ES245ST23	B556B	M 14 x 1.5	17	45	65	Special Black	■
B17ES250ST23	B559B	M 14 x 1.5	17	50	70	Special Black	■
B17ES255ST23	B561B	M 14 x 1.5	17	55	75	Special Black	■
B17ES260ST23	B563B	M 14 x 1.5	17	60	80	Special Black	■

■ May not be in stock - please enquire.

2.1 WHEEL LUG BOLTS

VITE FISSAGGIO / RADSCHRAUBE
TORNILLO DE FIJACION / КРЕПЕЖНЫЙ БОЛТ

HEX **17** MM | BALL **R13** SEAT | THREAD **M12x1.5** SIZE

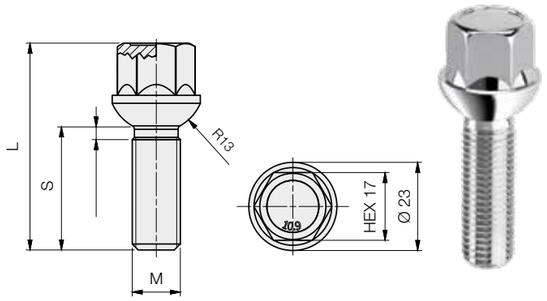

CLASS 10.9

Model code	Art.	Thread size	Hex	S	L	Finish	Stock
B17BS328	B1175	M 12 x 1.5	17	28	48.6	Galvanized	■
B17BS330	B1176	M 12 x 1.5	17	30	50.6	Galvanized	■
B17BS350	B1184	M 12 x 1.5	17	50	70.6	Galvanized	■

HEX **17** MM | BALL **R13** SEAT | THREAD **M14x1.25** SIZE

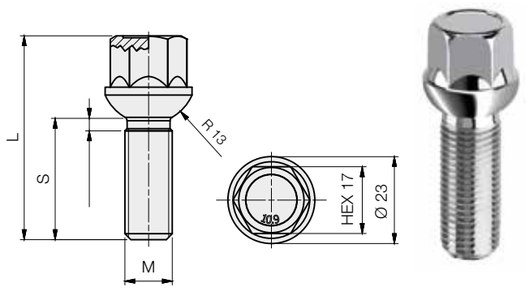

CLASS 10.9

Model code	Art.	Thread size	Hex	S	L	Finish	Stock
B17DS330ST21	B1225	M 14 x 1.25	17	30	50.7	Galvanized	■

HEX **17** MM | BALL **R13** SEAT | THREAD **M14x1.25** SIZE

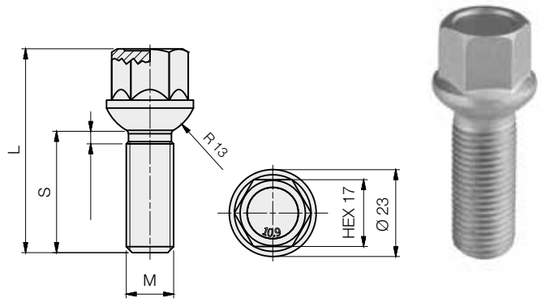

CLASS 10.9

Model code	Art.	Thread size	Hex	S	L	Finish	Stock
B17DS330ST27	B1225G	M 14 x 1.25	17	30	50.7	Geomet	■

HEX **17** MM | BALL **R13** SEAT | THREAD **M14x1.5** SIZE

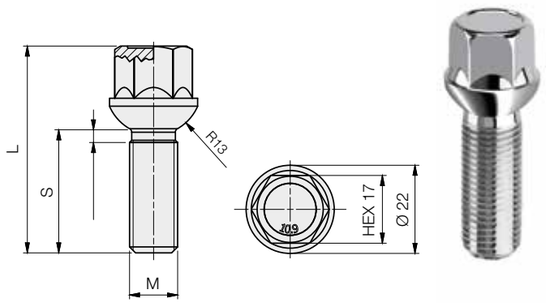

CLASS 10.9

Model code	Art.	Thread size	Hex	S	L	Finish	Stock
B17ES327	B1125	M 14 x 1.5	17	27	48	Galvanized	■
B17ES330	B1126	M 14 x 1.5	17	30	51	Galvanized	■
B17ES333	B1127	M 14 x 1.5	17	33	54	Galvanized	■
B17ES335	B1128	M 14 x 1.5	17	35	56	Galvanized	■
B17ES338	B1129	M 14 x 1.5	17	38	59	Galvanized	■
B17ES340	B1130	M 14 x 1.5	17	40	61	Galvanized	■
B17ES343	B1131	M 14 x 1.5	17	43	64	Galvanized	■
B17ES345	B1132	M 14 x 1.5	17	45	66	Galvanized	■
B17ES347	B1133	M 14 x 1.5	17	47	68	Galvanized	■
B17ES350	B1134	M 14 x 1.5	17	50	71	Galvanized	■
B17ES355	B1135	M 14 x 1.5	17	55	77	Galvanized	■
B17ES360	B1136	M 14 x 1.5	17	60	81	Galvanized	■

■ May not be in stock - please enquire.

ELLIS EXCELLENCE IN WHEEL ACCESSORIES

2.1 WHEEL LUG BOLTS

VITE FISSAGGIO / RADSCHRAUBE
TORNILLO DE FIJACION / КРЕПЕЖНЫЙ БОЛТ

HEX	BALL	THREAD
17 MM	R13 SEAT	M14x1.5 SIZE

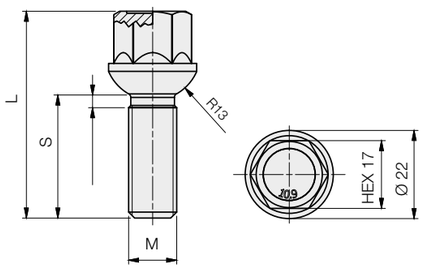

CLASS 10.9

Model code	Art.	Thread size	Hex	S	L	Finish	Stock
B17ES333ST27	B1127G	M 14 x 1.5	17	33	54	Geomet	■
B17ES335ST27	B1128G	M 14 x 1.5	17	35	56	Geomet	■
B17ES338ST27	B1129G	M 14 x 1.5	17	38	59	Geomet	■
B17ES340ST27	B1130G	M 14 x 1.5	17	40	61	Geomet	■
B17ES343ST27	B1131G	M 14 x 1.5	17	43	64	Geomet	■
B17ES360ST27	B1136G	M 14 x 1.5	17	60	81	Geomet	■

HEX	BALL	THREAD
17 MM	R13 SEAT	M14x1.5 SIZE

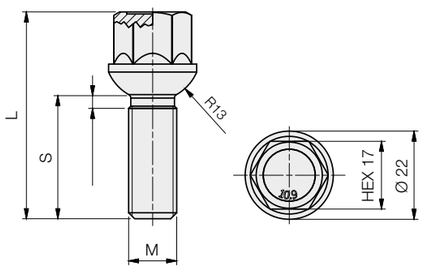

CLASS 10.9

Model code	Art.	Thread size	Hex	S	L	Finish	Stock
B17ES327ST23	B1125B	M 14 x 1.5	17	27	48	Special Black	■
B17ES330ST23	B1126B	M 14 x 1.5	17	30	51	Special Black	■
B17ES333ST23	B1127B	M 14 x 1.5	17	33	54	Special Black	■
B17ES335ST23	B1128B	M 14 x 1.5	17	35	56	Special Black	■
B17ES338ST23	B1129B	M 14 x 1.5	17	38	59	Special Black	■
B17ES340ST23	B1130B	M 14 x 1.5	17	40	61	Special Black	■
B17ES343ST23	B1131B	M 14 x 1.5	17	43	64	Special Black	■
B17ES345ST23	B1132B	M 14 x 1.5	17	45	66	Special Black	■
B17ES347ST23	B1133B	M 14 x 1.5	17	47	68	Special Black	■
B17ES350ST23	B1134B	M 14 x 1.5	17	50	71	Special Black	■
B17ES355ST23	B1135B	M 14 x 1.5	17	55	77	Special Black	■
B17ES360ST23	B1136B	M 14 x 1.5	17	60	81	Special Black	■

HEX	BALL	THREAD
17 MM	R14 SEAT	M12x1.5 SIZE

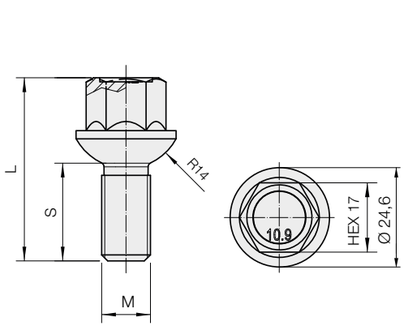

CLASS 10.9

Model code	Art.	Thread size	Hex	S	L	Finish	Stock
B17BS424ST27	B1200G	M 12 x 1.5	17	24	45	Geomet	■

HEX	BALL	THREAD
17 MM	R14 SEAT	M14x1.25 SIZE

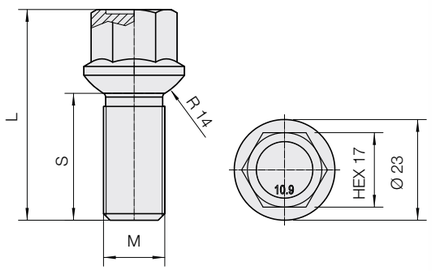

CLASS 10.9

Model code	Art.	Thread size	Hex	S	L	Finish	Stock
B17DS429	B1330	M 14 x 1.25	17	29	49.5	Galvanized	■

■ May not be in stock - please enquire.

2.1 WHEEL LUG BOLTS

VITE FISSAGGIO / RADSCHRAUBE
TORNILLO DE FIJACION / КРЕПЕЖНЫЙ БОЛТ

HEX	BALL	THREAD
17 MM	R14 SEAT	M14x1.5 SIZE

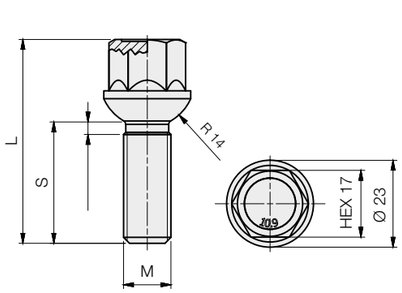

CLASS 10.9

Model code	Art.	Thread size	Hex	S	L	Finish	Stock
B17ES427	B584	M 14 x 1.5	17	27	46.4	Galvanized	■
B17ES430	B587	M 14 x 1.5	17	30	49.4	Galvanized	■
B17ES433	B585	M 14 x 1.5	17	33	52.4	Galvanized	■
B17ES435	B575	M 14 x 1.5	17	35	54.4	Galvanized	■
B17ES438	B586	M 14 x 1.5	17	38	57.4	Galvanized	■
B17ES440	B576	M 14 x 1.5	17	40	59.4	Galvanized	■
B17ES443	B577	M 14 x 1.5	17	43	62.4	Galvanized	■
B17ES445	B578	M 14 x 1.5	17	45	64.4	Galvanized	■
B17ES447	B579	M 14 x 1.5	17	47	66.4	Galvanized	■
B17ES450	B580	M 14 x 1.5	17	50	69.4	Galvanized	■
B17ES455	B581	M 14 x 1.5	17	55	74.4	Galvanized	■
B17ES460	B582	M 14 x 1.5	17	60	79.4	Galvanized	■
B17ES465	B583	M 14 x 1.5	17	65	84.4	Galvanized	■

HEX	BALL	THREAD
17 MM	R14 SEAT	M14x1.5 SIZE

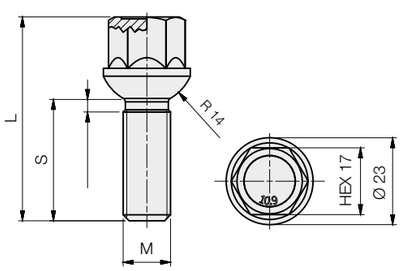

CLASS 10.9

Model code	Art.	Thread size	Hex	S	L	Finish	Stock
B17ES427ST27	B584G	M 14 x 1.5	17	27	46.4	Geomet	■
B17ES433ST27	B585G	M 14 x 1.5	17	33	52.4	Geomet	■
B17ES438ST27	B586G	M 14 x 1.5	17	38	57.4	Geomet	■
B17ES440ST27	B576G	M 14 x 1.5	17	40	59.4	Geomet	■
B17ES443ST27	B577G	M 14 x 1.5	17	43	62.4	Geomet	■
B17ES445ST27	B578G	M 14 x 1.5	17	45	64.4	Geomet	■
B17ES447ST27	B579G	M 14 x 1.5	17	47	66.4	Geomet	■
B17ES450ST27	B580G	M 14 x 1.5	17	50	69.4	Geomet	■

HEX	BALL	THREAD
17 MM	R14 SEAT	M14x1.5 SIZE

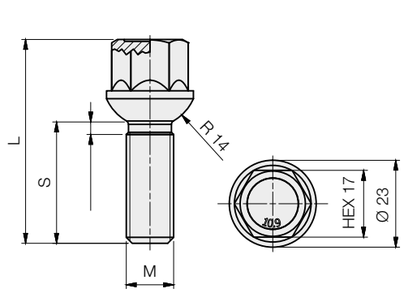

CLASS 10.9

Model code	Art.	Thread size	Hex	S	L	Finish	Stock
B17ES427ST23	B584B	M 14 x 1.5	17	27	46.4	Special Black	■
B17ES430ST23	B587B	M 14 x 1.5	17	30	49.4	Special Black	■
B17ES433ST23	B585B	M 14 x 1.5	17	33	52.4	Special Black	■
B17ES435ST23	B575B	M 14 x 1.5	17	35	54.4	Special Black	■
B17ES440ST23	B576B	M 14 x 1.5	17	40	59.4	Special Black	■
B17ES443ST23	B577B	M 14 x 1.5	17	43	62.4	Special Black	■
B17ES445ST23	B578B	M 14 x 1.5	17	45	64.4	Special Black	■
B17ES447ST23	B579B	M 14 x 1.5	17	47	66.4	Special Black	■
B17ES450ST23	B580B	M 14 x 1.5	17	50	69.4	Special Black	■
B17ES455ST23	B581B	M 14 x 1.5	17	55	74.4	Special Black	■
B17ES460ST23	B582B	M 14 x 1.5	17	60	79.4	Special Black	■
B17ES465ST23	B583B	M 14 x 1.5	17	65	84.4	Special Black	■

HEX	BALL	THREAD
17 MM	R12 SEAT	M12x1.5 SIZE

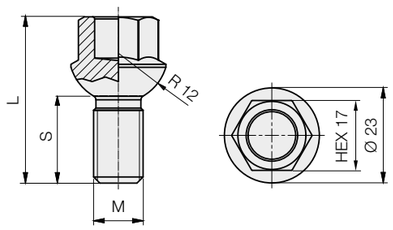

CLASS 10.9

Model code	Art.	Thread size	Hex	S	L	Finish	Stock
B17BS221TF	B850	M 12 x 1.5	17	21	40	Galvanized	■

■ May not be in stock - please enquire.

2.1 WHEEL LUG BOLTS

VITE FISSAGGIO / RADSCHRAUBE
TORNILLO DE FIJACION / КРЕПЕЖНЫЙ БОЛТ

HEX	BALL	THREAD
17 MM	R12 SEAT	M14x1.5 SIZE

Model code	Art.	Thread size	Hex	S	L	Finish	Stock
B17ES226TF	B925	M 14 x 1.5	17	25.9	45	Galvanized	■

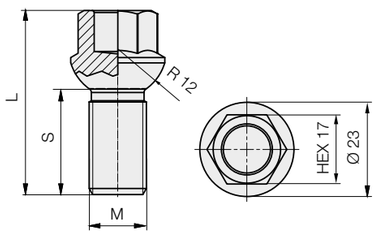

CLASS 10.9

HEX	BALL	THREAD
17 MM	R13 SEAT	M12x1.5 SIZE

Model code	Art.	Thread size	Hex	S	L	Finish	Stock
B17BS325TT	B875	M 12 x 1.5	17	25	44.5	Galvanized	■

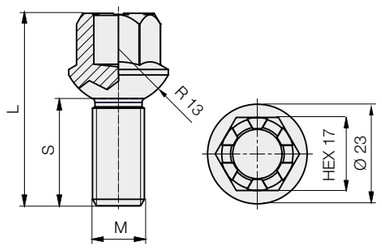

CLASS 10.9

HEX	BALL	THREAD
17 MM	R13 SEAT	M12x1.5 SIZE

Model code	Art.	Thread size	Hex	S	L	Finish	Stock
B17BS325TT23	B875B	M 12 x 1.5	17	25	44.5	Special Black	■

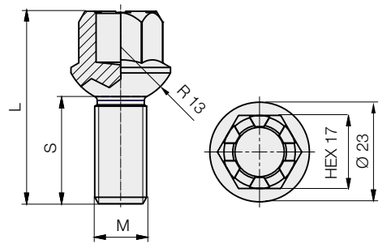

CLASS 10.9

HEX	BALL	THREAD
17 MM	R13 SEAT	M14x1.5 SIZE

Model code	Art.	Thread size	Hex	S	L	Finish	Stock
B17ES327TT	B950	M 14 x 1.5	17	27	48	Galvanized	■

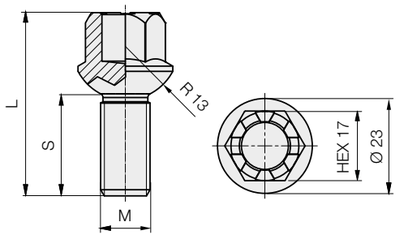

CLASS 10.9

■ May not be in stock - please enquire.

2.1 WHEEL LUG BOLTS

VITE FISSAGGIO / RADSCHRAUBE
TORNILLO DE FIJACION / КРЕПЕЖНЫЙ БОЛТ

HEX	BALL	THREAD
17 MM	R13 SEAT	M14x1.5 SIZE

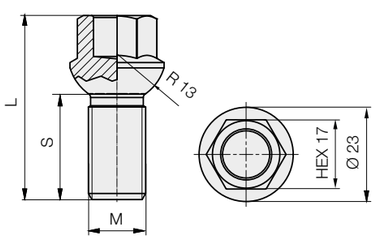

CLASS 10.9

Model code	Art.	Thread size	Hex	S	L	Finish	Stock
B17ES327TT23	B950B	M 14 x 1.5	17	27	48	Special Black	■

HEX	BALL	THREAD
17 MM	R14 SEAT	M14x1.5 SIZE

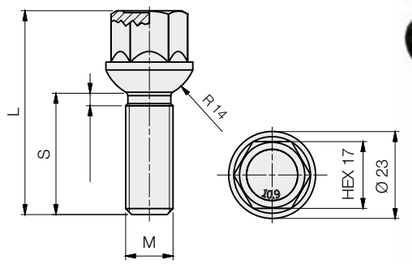

CLASS 10.9

Model code	Art.	Thread size	Hex	S	L	Finish	Stock
B17ES427TT23	B975B	M 14 x 1.5	17	27	48	Special Black	■

HEX	BALL	THREAD
17 MM	R14 SEAT	M14x1.5 SIZE

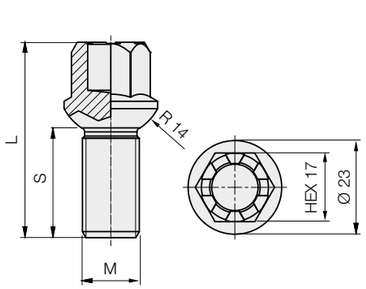

CLASS 10.9

Model code	Art.	Thread size	Hex	S	L	Finish	Stock
B17ES427TT	B975	M 14 x 1.5	17	27	48	Galvanized	■

HEX	CONE	THREAD
17 MM	VAR. PCD SEAT	M12x1.25 SIZE

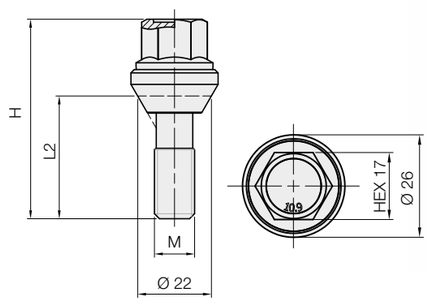

CLASS 10.9

Model code	Art.	Thread size	Hex	L2	H	Finish	Stock
B17AWV32	B625	M 12 x 1.25	17	32.1	54.5	Galvanized	■
B17AWV35	B626	M 12 x 1.25	17	34.5	57	Galvanized	■

■ May not be in stock - please enquire.

2.1 WHEEL LUG BOLTS

VITE FISSAGGIO / RADSCHRAUBE
TORNILLO DE FIJACION / КРЕПЕЖНЫЙ БОЛТ

HEX **17** MM | CONE **VAR. PCD** SEAT | THREAD **M12x1.5** SIZE

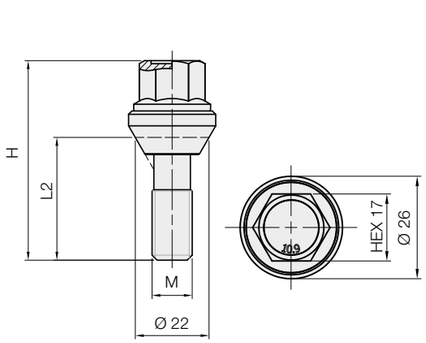

CLASS 10.9

Model code	Art.	Thread size	Hex	L2	H	Finish	Stock
B17BWV37	B627	M 12 x 1.5	17	36.5	59	Galvanized	■
B17BWV40	B628	M 12 x 1.5	17	39.5	62	Galvanized	■

HEX **17** MM | CONE **VAR. PCD** SEAT | THREAD **M14x1.5** SIZE

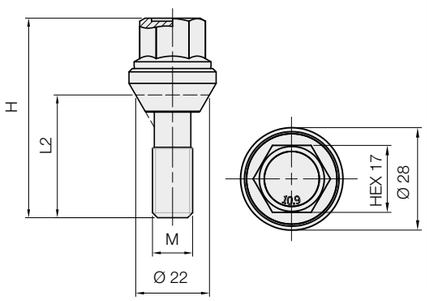

CLASS 10.9

Model code	Art.	Thread size	Hex	L2	H	Finish	Stock
B17EWV35	B629	M 14 x 1.5	17	35	58	Galvanized	■

HEX **17** MM | WASHER **FLAT** SEAT | THREAD **M12x1.25** SIZE

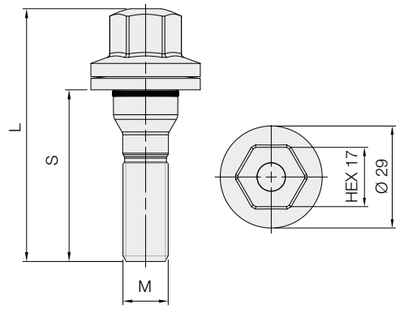

CLASS 10.9

Model code	Art.	Thread size	Hex	S	L	Finish	Stock
B17AWR35	B1075	M 12 x 1.25	17	35	57	Geomet	■
B17AWR40	B1076	M 12 x 1.25	17	40	62	Geomet	■
B17AWR45	B1077	M 12 x 1.25	17	45	67	Geomet	■
B17AWR50	B1078	M 12 x 1.25	17	50	72	Geomet	■
B17AWR55	B1079	M 12 x 1.25	17	55	77	Geomet	■

HEX **17** MM | WASHER **FLAT** SEAT | THREAD **M12x1.25** SIZE

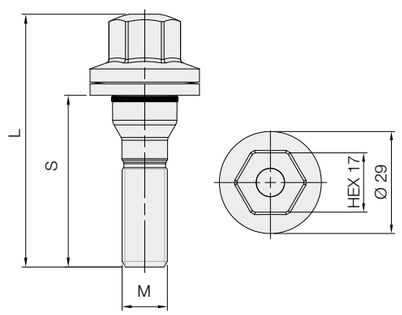

CLASS 10.9

Model code	Art.	Thread size	Hex	S	L	Finish	Stock
B17AWR35ST21	SB1075	M 12 x 1.25	17	35	57	Galvanized	■
B17AWR40ST21	SB1076	M 12 x 1.25	17	40	62	Galvanized	■
B17AWR45ST21	SB1077	M 12 x 1.25	17	45	67	Galvanized	■
B17AWR50ST21	SB1078	M 12 x 1.25	17	50	72	Galvanized	■
B17AWR55ST21	SB1079	M 12 x 1.25	17	55	77	Galvanized	■

■ May not be in stock - please enquire.

2.1 WHEEL LUG BOLTS

VITE FISSAGGIO / RADSCHRAUBE
TORNILLO DE FIJACION / КРЕПЕЖНЫЙ БОЛТ

HEX **17** MM | WASHER **FLAT** SEAT | THREAD **M12x1.5** SIZE

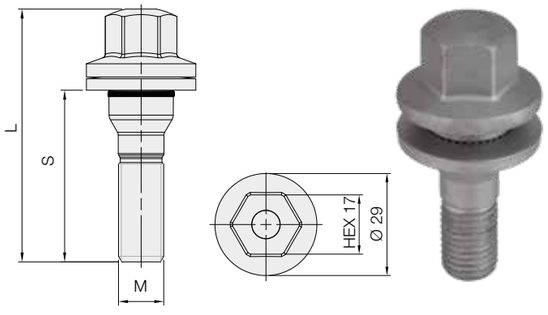

CLASS 10.9

Model code	Art.	Thread size	Hex	S	L	Finish	Stock
B17BWR33	B1151	M 12 x 1.5	17	32.5	54	Geomet	■
B17BWR35	B1150	M 12 x 1.5	17	35	57	Geomet	■
B17BWR37	B1152	M 12 x 1.5	17	37	59	Geomet	▪
B17BWR43	B1153	M 12 x 1.5	17	43	65	Geomet	▪
B17BWR48	B1154	M 12 x 1.5	17	48	70	Geomet	▪
B17BWR53	B1155	M 12 x 1.5	17	53	75	Geomet	▪

HEX **17** MM | WASHER **R13** SEAT | THREAD **M14x1.5** SIZE

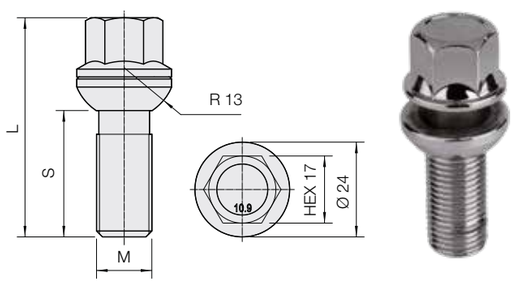

CLASS 10.9

Model code	Art.	Thread size	Hex	S	L	Finish	Stock
B17EW332	B1350	M 14 x 1.5	17	32	55.7	Galvanized	■
B17EW339	B1351	M 14 x 1.5	17	39	62.7	Galvanized	■
B17EW342	B1352	M 14 x 1.5	17	42	65.7	Galvanized	■
B17EW348	B1353	M 14 x 1.5	17	48	71.7	Galvanized	■

HEX **17** MM | WASHER **R13** SEAT | THREAD **M14x1.5** SIZE

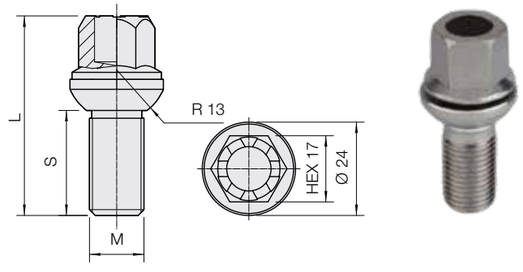

CLASS 10.9

Model code	Art.	Thread size	Hex	S	L	Finish	Stock
B17EW327TF	B1390	M 14 x 1.5	17	27	50.5	Galvanized	■

HEX **17** MM | WASHER **R14** SEAT | THREAD **M14x1.5** SIZE

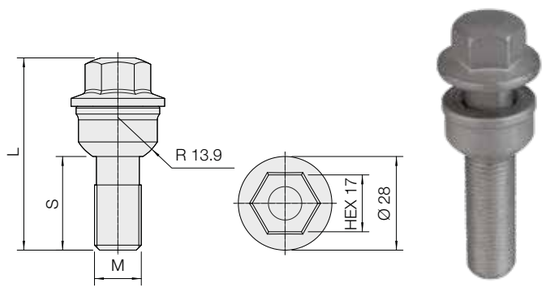

CLASS 10.9

Model code	Art.	Thread size	Hex	S	L	Finish	Stock
B17EW428AU	B1285	M 14 x 1.5	17	28	57.5	Geomet	■
B17EW430AU	B1286	M 14 x 1.5	17	30	59.5	Geomet	▪
B17EW437AU	B1287	M 14 x 1.5	17	37	66.5	Geomet	▪
B17EW442AU	B1288	M 14 x 1.5	17	42	71.5	Geomet	▪
B17EW445AU	B1289	M 14 x 1.5	17	45	74.5	Geomet	▪
B17EW448AU	B1290	M 14 x 1.5	17	48	77.5	Geomet	▪
B17EW450AU	B1291	M 14 x 1.5	17	50	79.5	Geomet	▪
B17EW453AU	B1292	M 14 x 1.5	17	53	82.5	Geomet	▪

▪ May not be in stock - please enquire.

2.1 WHEEL LUG BOLTS

VITE FISSAGGIO / RADSCHRAUBE
TORNILLO DE FIJACION / КРЕПЕЖНЫЙ БОЛТ

HEX	WASHER	THREAD
17 MM	R14 SEAT	M15x1.25 SIZE

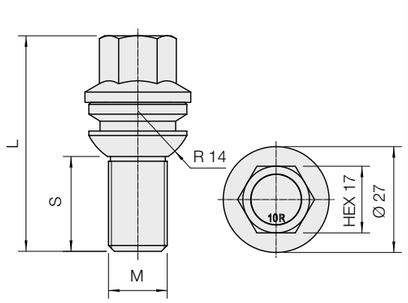

CLASS 10.9

Model code	Art.	Thread size	Hex	S	L	Finish	Stock
B17MW427ST61	B1275	M 15 x 1.25	17	27	57.8	Galvanized	■
B17MW430ST61	B1276	M 15 x 1.25	17	30	60.8	Galvanized	■
B17MW438ST61	B1277	M 15 x 1.25	17	38	68.8	Galvanized	■
B17MW443ST61	B1278	M 15 x 1.25	17	43	73.8	Galvanized	■
B17MW445ST61	B1279	M 15 x 1.25	17	45	75.8	Galvanized	■
B17MW448ST61	B1280	M 15 x 1.25	17	48	78.8	Galvanized	■
B17MW453ST61	B1281	M 15 x 1.25	17	53	83.8	Galvanized	■
B17MW457ST61	B1282	M 15 x 1.25	17	57	87.8	Galvanized	■
B17MW460ST61	B1283	M 15 x 1.25	17	60	90.8	Galvanized	■
B17MW463ST61	B1284	M 15 x 1.25	17	63	93.8	Galvanized	■
B17MW466ST61	B1295	M 15 x 1.25	17	66	96.8	Galvanized	■

HEX	WASHER	THREAD
17 MM	R14 SEAT	M15x1.25 SIZE

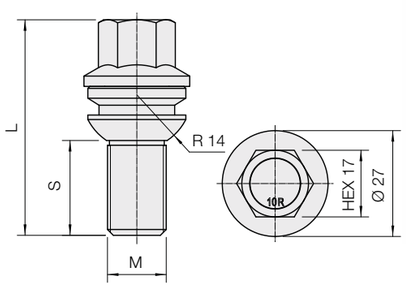

CLASS 10.9

Model code	Art.	Thread size	Hex	S	L	Finish	Stock
B17MW427ST63	B1275B	M 15 x 1.25	17	27	57.8	Special black	■
B17MW430ST63	B1276B	M 15 x 1.25	17	30	60.8	Special black	■
B17MW438ST63	B1277B	M 15 x 1.25	17	38	68.8	Special black	■
B17MW443ST63	B1278B	M 15 x 1.25	17	43	73.8	Special black	■
B17MW445ST63	B1279B	M 15 x 1.25	17	45	75.8	Special black	■
B17MW448ST63	B1280B	M 15 x 1.25	17	48	78.8	Special black	■
B17MW453ST63	B1281B	M 15 x 1.25	17	53	83.8	Special black	■
B17MW457ST63	B1282B	M 15 x 1.25	17	57	87.8	Special black	■
B17MW460ST63	B1283B	M 15 x 1.25	17	60	90.8	Special black	■
B17MW463ST63	B1284B	M 15 x 1.25	17	63	93.8	Special black	■
B17MW466ST63	B1295B	M 15 x 1.25	17	66	96.8	Special black	■

HEX	WASHER	THREAD
17 MM	60° SEAT	M15x1.25 SIZE

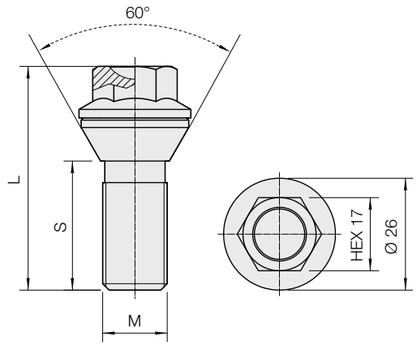

CLASS 10.9

Model code	Art.	Thread size	Hex	S	L	Finish	Stock
B17MWC27SC	B1325	M 15 x 1.25	17	27	54	Special black	■
B17MWC30SC	B1326	M 15 x 1.25	17	30	57	Special black	■

HEX	WASHER	THREAD
17 MM	60° SEAT	M12x1.25 SIZE

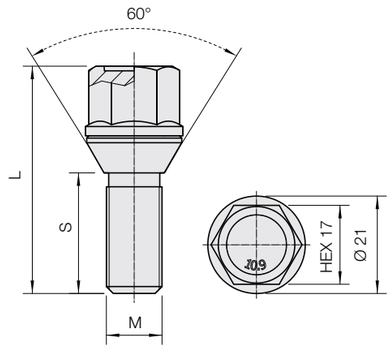

CLASS 10.9

Model code	Art.	Thread size	Hex	S	L	Finish	Stock
B17AWC26ST67	B1370	M 12 x 1.25	17	26	48.8	Geomet	■

■ May not be in stock - please enquire.

2.1 WHEEL LUG BOLTS

VITE FISSAGGIO / RADSCHRAUBE
TORNILLO DE FIJACION / КРЕПЕЖНЫЙ БОЛТ

HEX **17** MM | WASHER **60°** SEAT | THREAD **M14x1.25** SIZE

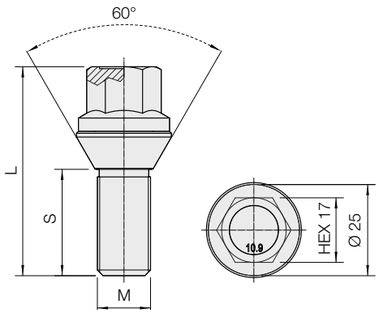

CLASS 10.9

Model code	Art.	Thread size	Hex	S	L	Finish	Stock
B17DWC28	B1300	M 14 x 1.25	17	28	54	Special black	■
B17DWC33	B1301	M 14 x 1.25	17	33	58	Special black	■
B17DWC35	B1302	M 14 x 1.25	17	35	60	Special black	■
B17DWC38	B1303	M 14 x 1.25	17	38	63	Special black	■
B17DWC40	B1304	M 14 x 1.25	17	40	65	Special black	■
B17DWC43	B1305	M 14 x 1.25	17	43	68	Special black	■
B17DWC45	B1306	M 14 x 1.25	17	45	70	Special black	■
B17DWC48	B1307	M 14 x 1.25	17	48	73	Special black	■
B17DWC50	B1308	M 14 x 1.25	17	50	76	Special black	■
B17DWC53	B1309	M 14 x 1.25	17	53	79	Special black	■

HEX **17** MM | WASHER **60°** SEAT | THREAD **M14x1.25** SIZE

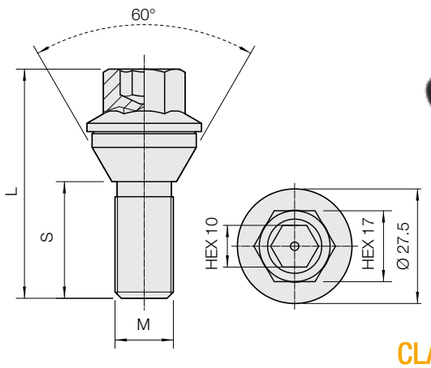

CLASS 10.9

Model code	Art.	Thread size	Hex	S	L	Finish	Stock
B17DWC28EI	B1360	M 14 x 1.25	17	28	54.3	Special black	■

HEX **19** MM | CONE **60°** SEAT | THREAD **M12x1.25** SIZE

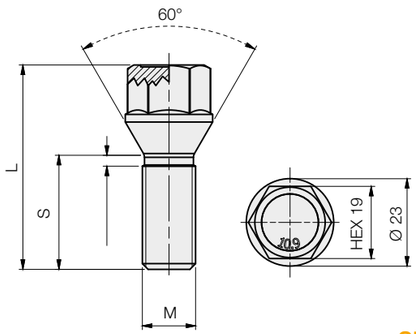

CLASS 10.9

Model code	Art.	Thread size	Hex	S	L	Finish	Stock
B19ACN24	B275	M 12 x 1.25	19	24	49	Galvanized	■
B19ACN26	B276	M 12 x 1.25	19	26	51	Galvanized	■
B19ACN28	B277	M 12 x 1.25	19	28	53	Galvanized	■
B19ACN32	B278	M 12 x 1.25	19	32	57	Galvanized	■
B19ACN34	B279	M 12 x 1.25	19	34	59	Galvanized	■
B19ACN36	B280	M 12 x 1.25	19	36	61	Galvanized	■
B19ACN39	B281	M 12 x 1.25	19	39	64	Galvanized	■
B19ACN42	B282	M 12 x 1.25	19	42	67	Galvanized	■
B19ACN46	B283	M 12 x 1.25	19	46	71	Galvanized	■
B19ACN50	B284	M 12 x 1.25	19	50	75	Galvanized	■

HEX **19** MM | CONE **60°** SEAT | THREAD **M12x1.5** SIZE

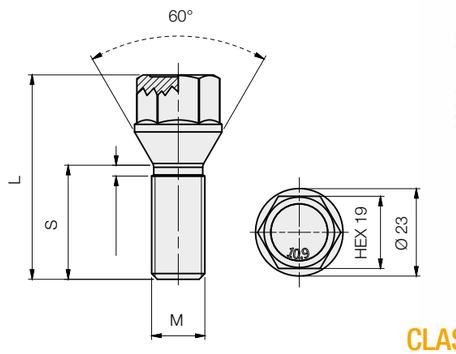

CLASS 10.9

Model code	Art.	Thread size	Hex	S	L	Finish	Stock
B19BCN24	B300	M 12 x 1.5	19	24	49.5	Galvanized	■
B19BCN26	B301	M 12 x 1.5	19	26	51.5	Galvanized	■
B19BCN50	B302	M 12 x 1.5	19	50	75.5	Galvanized	■

■ May not be in stock - please enquire.

2.1 WHEEL LUG BOLTS

VITE FISSAGGIO / RADSCHRAUBE
TORNILLO DE FIJACION / КРЕПЕЖНЫЙ БОЛТ

HEX **19** MM | CONE **60°** SEAT | THREAD **M12x1.5** SIZE

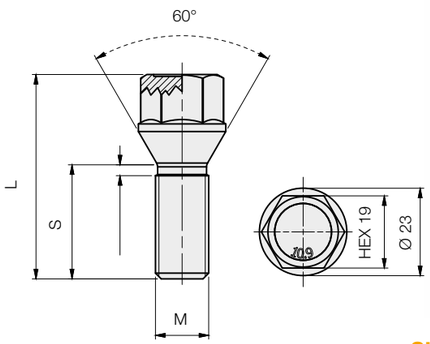

CLASS 10.9

Model code	Art.	Thread size	Hex	S	L	Finish	Stock
B19BCN26ST23	B301B	M 12 x 1.5	19	26	51.5	Special Black	■

HEX **19** MM | CONE **60°** SEAT | THREAD **M12x1.75** SIZE

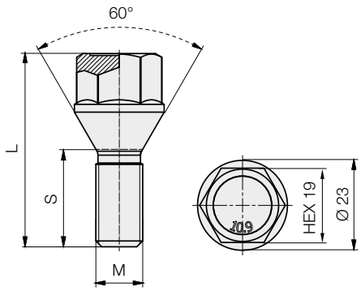

CLASS 10.9

Model code	Art.	Thread size	Hex	S	L	Finish	Stock
B19CCN27	B800	M 12 x 1.75	19	27	52.7	Galvanized	■
B19CCN35	B801	M 12 x 1.75	19	35	60.7	Galvanized	■

HEX **19** MM | CONE **60°** SEAT | THREAD **M12x1.5** SIZE

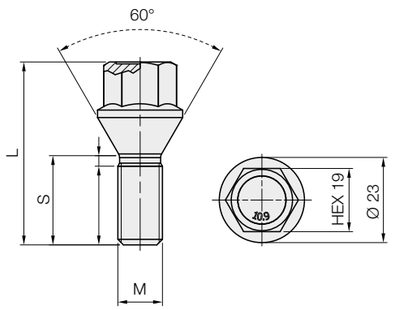

CLASS 10.9

Model code	Art.	Thread size	Hex	S	L	Finish	Stock
B19BCN26ST27	B301G	M 12 x 1.5	19	26	51.5	Geomet	■

HEX **19** MM | CONE **60°** SEAT | THREAD **M14x1.5** SIZE

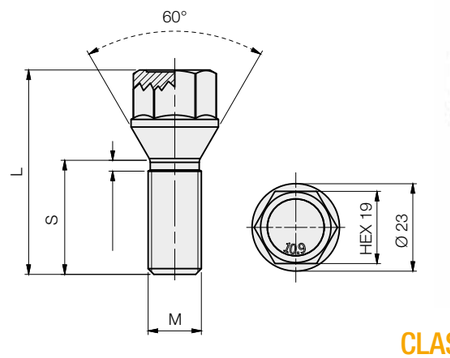

CLASS 10.9

Model code	Art.	Thread size	Hex	S	L	Finish	Stock
B19ECN28	B325	M 14 x 1.5	19	28	51.8	Galvanized	■
B19ECN30	B326	M 14 x 1.5	19	30	53.8	Galvanized	■
B19ECN33	B327	M 14 x 1.5	19	33	56.8	Galvanized	■
B19ECN34	B328	M 14 x 1.5	19	34	57.8	Galvanized	■
B19ECN36	B329	M 14 x 1.5	19	36	59.8	Galvanized	■
B19ECN50	B330	M 14 x 1.5	19	50	73.8	Galvanized	■
B19ECN69	B331	M 14 x 1.5	19	69	92.8	Galvanized	■

■ May not be in stock - please enquire.

2.1 WHEEL LUG BOLTS

VITE FISSAGGIO / RADSCHRAUBE
TORNILLO DE FIJACION / КРЕПЕЖНЫЙ БОЛТ

HEX **19** MM | CONE **60°** SEAT | THREAD **M14x1.5** SIZE

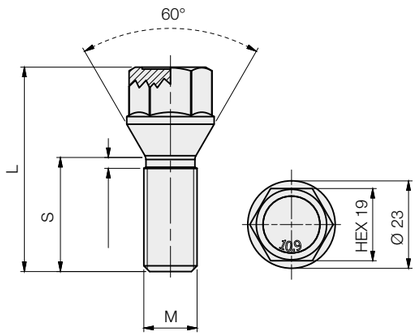

CLASS 10.9

Model code	Art.	Thread size	Hex	S	L	Finish	Stock
B19ECN36ST23	B329B	M 14 x 1.5	19	36	59.8	Special Black	■

HEX **19** MM | CONE **60°** SEAT | THREAD **M14x1.5** SIZE

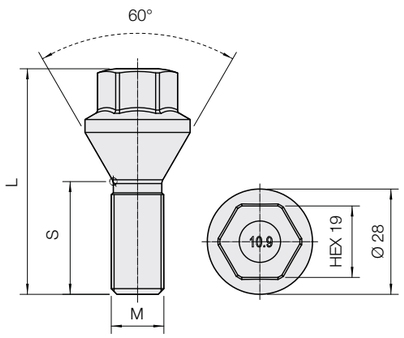

CLASS 10.9

Model code	Art.	Thread size	Hex	S	L	Finish	Stock
B19ECN30A1	B1400	M 14 x 1.5	19	30	60	Geomet	■

HEX **19** MM | CONE **60°** SEAT | THREAD **M16x1.5** SIZE

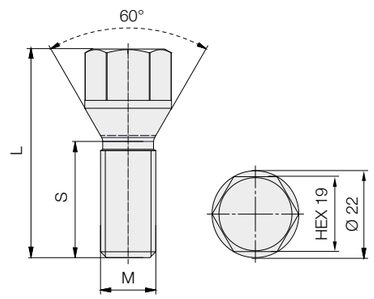

CLASS 10.9

Model code	Art.	Thread size	Hex	S	L	Finish	Stock
B19LCN28	B1051	M 16 x 1.5	19	28	50.8	Galvanized	■
B19LCN32	B1050	M 16 x 1.5	19	32	54.8	Galvanized	■
B19LCN36	B1052	M 16 x 1.5	19	36	58.8	Galvanized	■
B19LCN40	B1053	M 16 x 1.5	19	40	62.8	Galvanized	■

HEX **19** MM | BALL **R14** SEAT | THREAD **M14x1.5** SIZE

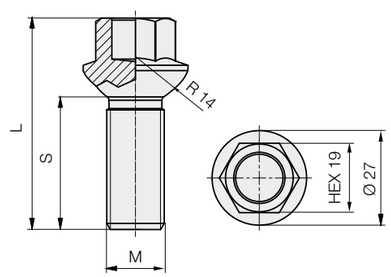

CLASS 10.9

Model code	Art.	Thread size	Hex	S	L	Finish	Stock
B19ES434TF	B1025	M 14 x 1.5	19	34	57.5	Phosphate coat	■

■ May not be in stock - please enquire.

2.1 WHEEL LUG BOLTS

VITE FISSAGGIO / RADSCHRAUBE
TORNILLO DE FIJACION / КРЕПЕЖНЫЙ БОЛТ

HEX **19** MM | BALL **R14** SEAT | THREAD **M14x1.5** SIZE

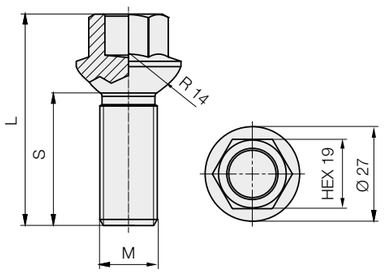

CLASS 10.9

Model code	Art.	Thread size	Hex	S	L	Finish	Stock
B19ES434TF21	SB1025	M 14 x 1.5	19	34	57.5	Galvanized	■

HEX **19** MM | CONE **VAR. PCD** SEAT | THREAD **M12x1.25** SIZE

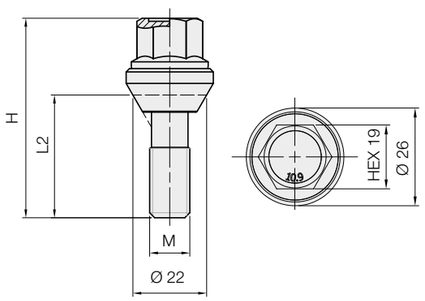

CLASS 10.9

Model code	Art.	Thread size	Hex	L2	H	Finish	Stock
B19AWV35	B635	M 12 x 1.25	19	34.6	57	Galvanized	■
B19AWV40	B636	M 12 x 1.25	19	39.6	62	Galvanized	■
B19AWV55	B637	M 12 x 1.25	19	55	67	Galvanized	■

HEX **19** MM | WASHER **FLAT** SEAT | THREAD **M12x1.25** SIZE

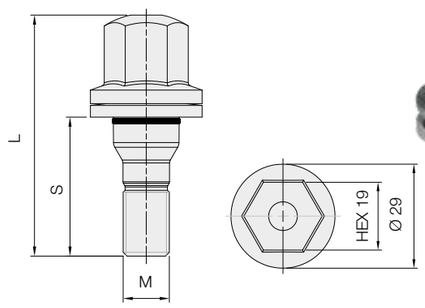

CLASS 10.9

Model code	Art.	Thread size	Hex	S	L	Finish	Stock
B19AWR35TL	B1100	M 12 x 1.25	19	35	62	Galvanized	■

HEX **19** MM | WASHER **R14** SEAT | THREAD **M14x1.5** SIZE

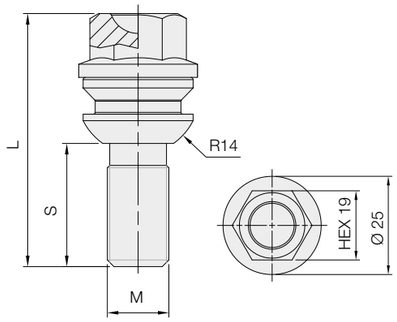

CLASS 10.9

Model code	Art.	Thread size	Hex	S	L	Finish	Stock
B19EW428SC	B650	M 14 x 1.5	19	28	57.5	Galvanized	■
B19EW430SC	B651	M 14 x 1.5	19	30	59.5	Galvanized	■
B19EW437SC	B652	M 14 x 1.5	19	37	66.5	Galvanized	■
B19EW442SC	B653	M 14 x 1.5	19	42	71.5	Galvanized	■
B19EW445SC	B654	M 14 x 1.5	19	45	74.5	Galvanized	■
B19EW448SC	B655	M 14 x 1.5	19	48	77.5	Galvanized	■
B19EW453SC	B656	M 14 x 1.5	19	53	82.5	Galvanized	■
B19EW458SC	B657	M 14 x 1.5	19	58	87.5	Galvanized	■

■ May not be in stock - please enquire.

2.1 WHEEL LUG BOLTS

VITE FISSAGGIO / RADSCHRAUBE
TORNILLO DE FIJACION / КРЕПЕЖНЫЙ БОЛТ

HEX	WASHER	THREAD
19 MM	R14 SEAT	M14x1.5 SIZE

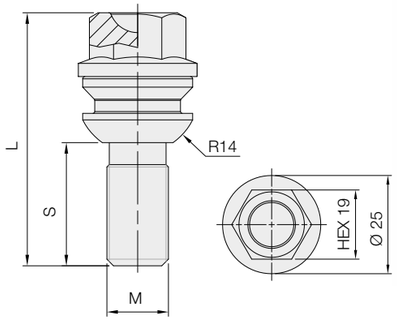

CLASS 10.9

Model code	Art.	Thread size	Hex	S	L	Finish	Stock
B19EW428SC63	B650B	M 14 x 1.5	19	28	57.5	Special Black	■
B19EW430SC63	B651B	M 14 x 1.5	19	30	59.5	Special Black	■
B19EW437SC63	B652B	M 14 x 1.5	19	37	66.5	Special Black	■
B19EW442SC63	B653B	M 14 x 1.5	19	42	71.5	Special Black	■
B19EW445SC63	B654B	M 14 x 1.5	19	45	74.5	Special Black	■
B19EW448SC63	B655B	M 14 x 1.5	19	48	77.5	Special Black	■
B19EW453SC63	B656B	M 14 x 1.5	19	53	82.5	Special Black	■
B19EW458SC63	B657B	M 14 x 1.5	19	58	87.5	Special Black	■

HEX	WASHER	THREAD
19 MM	R14 SEAT	M14x1.5 SIZE

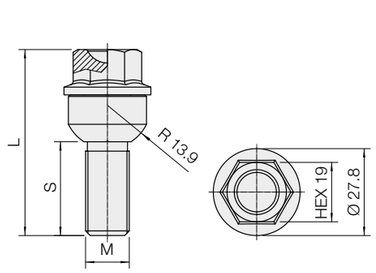

CLASS 10.9

Model code	Art.	Thread size	Hex	S	L	Finish	Stock
B19EW430PS67	B1250G	M 14 x 1.5	19	30	59.5	Geomet	■
B19EW434PS67	B1251G	M 14 x 1.5	19	34	63.5	Geomet	■
B19EW437PS67	B1252G	M 14 x 1.5	19	37	66.5	Geomet	■
B19EW440PS67	B1253G	M 14 x 1.5	19	40	69.5	Geomet	■
B19EW445PS67	B1254G	M 14 x 1.5	19	45	74.5	Geomet	■
B19EW450PS67	B1255G	M 14 x 1.5	19	50	79.5	Geomet	■
B19EW453PS67	B1256G	M 14 x 1.5	19	53	82.5	Geomet	■
B19EW458PS67	B1257G	M 14 x 1.5	19	58	87.5	Geomet	■

HEX	WASHER	THREAD
19 MM	R14 SEAT	M14x1.5 SIZE

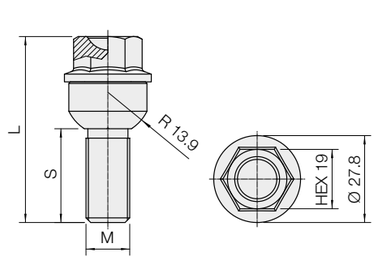

CLASS 10.9

Model code	Art.	Thread size	Hex	S	L	Finish	Stock
B19EW430PS63	B1250B	M 14 x 1.5	19	30	59.5	Special black	■
B19EW434PS63	B1251B	M 14 x 1.5	19	34	63.5	Special black	■
B19EW437PS63	B1252B	M 14 x 1.5	19	37	66.5	Special black	■
B19EW440PS63	B1253B	M 14 x 1.5	19	40	69.5	Special black	■
B19EW445PS63	B1254B	M 14 x 1.5	19	45	74.5	Special black	■
B19EW450PS63	B1255B	M 14 x 1.5	19	50	79.5	Special black	■
B19EW453PS63	B1256B	M 14 x 1.5	19	53	82.5	Special black	■
B19EW458PS63	B1257B	M 14 x 1.5	19	58	87.5	Special black	■

HEX	WASHER	THREAD
19 MM	R14 SEAT	M14x1.5 SIZE

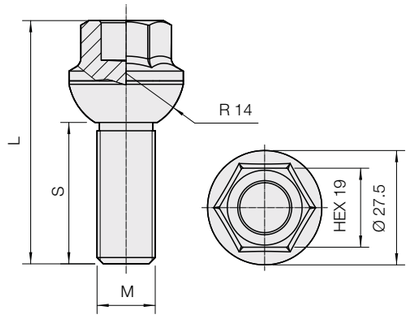

CLASS 10.9

Model code	Art.	Thread size	Hex	S	L	Finish	Stock
B19EW434TF	B1380	M 14 x 1.5	19	34	58.5	Geomet	■

■ May not be in stock - please enquire.

ELLIS EXCELLENCE IN WHEEL ACCESSORIES

2.1 WHEEL LUG BOLTS

VITE FISSAGGIO / RADSCHRAUBE
TORNILLO DE FIJACION / КРЕПЕЖНЫЙ БОЛТ

HEX	WASHER	THREAD
19 MM	60° SEAT	M14x1.5 SIZE

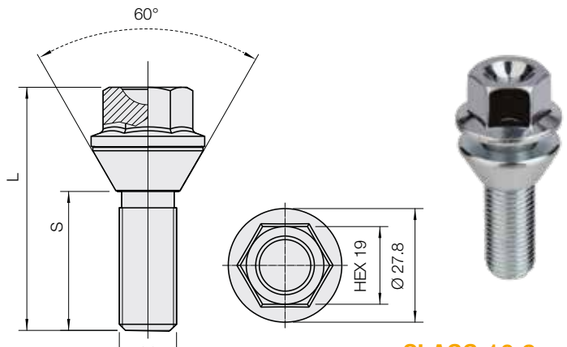

CLASS 10.9

Model code	Art.	Thread size	Hex	S	L	Finish	Stock
B19EWC34A0	B1410	M 14 x 1.5	19	34	59.5	Galvanized	■

HEX	WASHER	THREAD
19 MM	60° SEAT	M14x1.5 SIZE

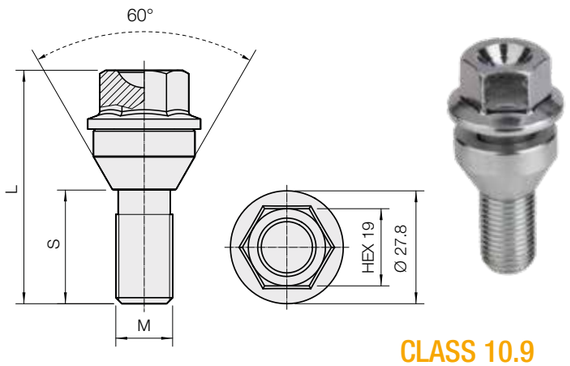

CLASS 10.9

Model code	Art.	Thread size	Hex	S	L	Finish	Stock
B19EWC28SC	B1315	M 14 x 1.5	19	28	57.5	Galvanized	■
B19EWC30SC	B1316	M 14 x 1.5	19	30	59.5	Galvanized	■
B19EWC34SC	B1317	M 14 x 1.5	19	34	63.5	Galvanized	■
B19EWC37SC	B1318	M 14 x 1.5	19	37	66.5	Galvanized	■
B19EWC42SC	B1319	M 14 x 1.5	19	42	71.5	Galvanized	■
B19EWC45SC	B1320	M 14 x 1.5	19	45	74.5	Galvanized	■
B19EWC48SC	B1321	M 14 x 1.5	19	48	77.5	Galvanized	■
B19EWC53SC	B1322	M 14 x 1.5	19	53	82.5	Galvanized	■
B19EWC58SC	B1323	M 14 x 1.5	19	58	87.5	Galvanized	■

2.2 TUNER LUG BOLTS

VITE FISSAGGIO STELLARE / STERNFÖRMIGE BEFESTIGUNGSSCHRAUBE
TORNILLO DE FIJACION RADIAL / МНОГРАННЫЙ КРЕПЕЖНЫЙ БОЛТ

HEAD Ø	CONE	THREAD
20 MM	60° SEAT	M12x1.25 SIZE

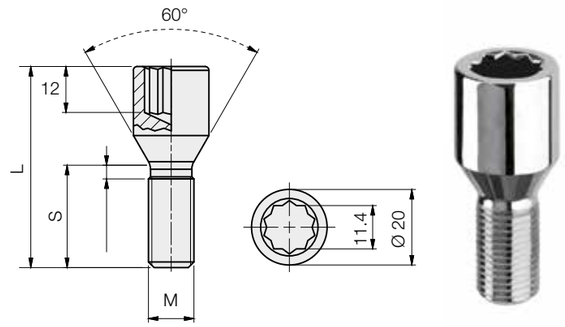

CLASS 10.9

Model code	Art.	Thread size	Head Ø	S	L	Finish	Stock
BS0ACN19	B375	M 12 x 1.25	20 mm	19	44.8	Galvanized	■
BS0ACN24	B376	M 12 x 1.25	20 mm	24	49.8	Galvanized	■
BS0ACN26	B377	M 12 x 1.25	20 mm	26	51.8	Galvanized	■
BS0ACN28	B378	M 12 x 1.25	20 mm	28	53.8	Galvanized	■
BS0ACN30	B379	M 12 x 1.25	20 mm	30	55.8	Galvanized	■
BS0ACN36	B380	M 12 x 1.25	20 mm	36	61.8	Galvanized	■
BS0ACN37	B381	M 12 x 1.25	20 mm	37	62.8	Galvanized	■
BS0ACN40	B382	M 12 x 1.25	20 mm	40	65.8	Galvanized	■
BS0ACN42	B383	M 12 x 1.25	20 mm	42	67.8	Galvanized	■
BS0ACN45	B384	M 12 x 1.25	20 mm	45	70.8	Galvanized	■
BS0ACN50	B385	M 12 x 1.25	20 mm	50	75.8	Galvanized	■

HEAD Ø	CONE	THREAD
20 MM	60° SEAT	M12x1.25 SIZE

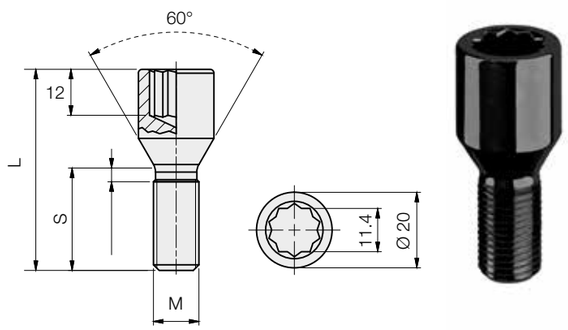

CLASS 10.9

Model code	Art.	Thread size	Head Ø	S	L	Finish	Stock
BS0ACN24ST23	B376B	M 12 x 1.25	20 mm	24	49.8	Special black	■
BS0ACN26ST23	B377B	M 12 x 1.25	20 mm	26	51.8	Special Black	■
BS0ACN28ST23	B378B	M 12 x 1.25	20 mm	28	53.8	Special Black	■
BS0ACN36ST23	B380B	M 12 x 1.25	20 mm	36	61.8	Special Black	■
BS0ACN37ST23	B381B	M 12 x 1.25	20 mm	37	62.8	Special black	■
BS0ACN50ST23	B385B	M 12 x 1.25	20 mm	50	75.8	Special Black	■
BS0ACN40ST23	B382B	M 12 x 1.25	20 mm	40	65.8	Special Black	■
BS0ACN42ST23	B383B	M 12 x 1.25	20 mm	42	67.8	Special Black	■
BS0ACN45ST23	B384B	M 12 x 1.25	20 mm	45	70.8	Special Black	■

■ May not be in stock - please enquire.

ELLIS EXCELLENCE IN WHEEL ACCESSORIES

2.2 TUNER LUG BOLTS

VITE FISSAGGIO STELLARE / STERNFÖRMIGE BEFESTIGUNGSSCHRAUBE
TORNILLO DE FIJACION RADIAL / МНОГРАННЫЙ КРЕПЕЖНЫЙ БОЛТ

HEAD Ø	CONE	THREAD
20 MM	60° SEAT	M12x1.5 SIZE

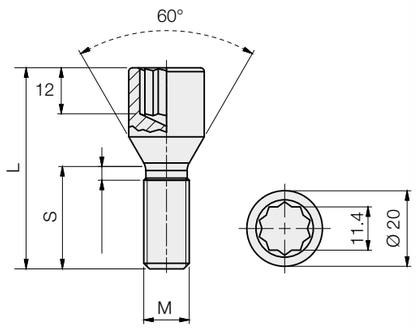

CLASS 10.9

Model code	Art.	Thread size	Head Ø	S	L	Finish	Stock
BS0BCN22	B350	M 12 x 1.5	20 mm	22	48	Galvanized	■
BS0BCN24	B351	M 12 x 1.5	20 mm	24	50	Galvanized	■
BS0BCN26	B352	M 12 x 1.5	20 mm	26	52	Galvanized	■
BS0BCN28	B353	M 12 x 1.5	20 mm	28	54	Galvanized	■
BS0BCN32	B354	M 12 x 1.5	20 mm	32	58	Galvanized	■
BS0BCN40	B356	M 12 x 1.5	20 mm	40	65	Galvanized	■
BS0BCN45	B355	M 12 x 1.5	20 mm	45	71	Galvanized	■

HEAD Ø	CONE	THREAD
20 MM	60° SEAT	M12x1.75 SIZE

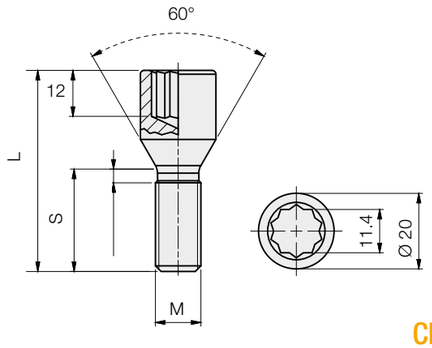

CLASS 10.9

Model code	Art.	Thread size	Head Ø	S	L	Finish	Stock
BS0CCN25	B425	M 12 x 1.75	20 mm	25	51	Galvanized	■
BS0CCN28	B426	M 12 x 1.75	20 mm	28	54	Galvanized	■
BS0CCN30	B427	M 12 x 1.75	20 mm	30	56	Galvanized	■

HEAD Ø	CONE	THREAD
20 MM	60° SEAT	M12x1.5 SIZE

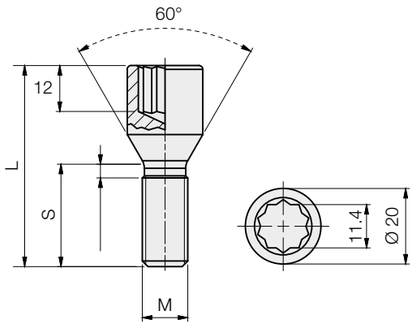

CLASS 10.9

Model code	Art.	Thread size	Head Ø	S	L	Finish	Stock
BS0BCN24ST23	B351B	M 12 x 1.5	20 mm	24	50	Special Black	■
BS0BCN28ST23	B353B	M 12 x 1.5	20 mm	28	54	Special Black	■
BS0BCN32ST23	B354B	M 12 x 1.5	20 mm	32	58	Special Black	■
BS0BCN40ST23	B356B	M 12 x 1.5	20 mm	40	65	Special Black	■
BS0BCN45ST23	B355B	M 12 x 1.5	20 mm	45	71	Special Black	■

HEAD Ø	CONE	THREAD
20 MM	60° SEAT	M14x1.25 SIZE

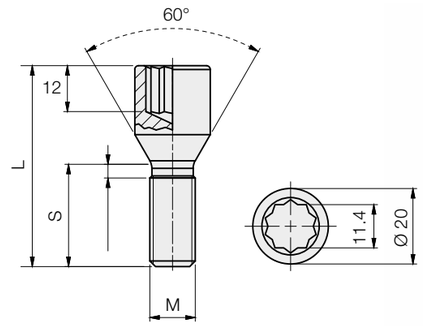

CLASS 10.9

Model code	Art.	Thread size	Head Ø	S	L	Finish	Stock
BS0DCN27	B410	M 14 x 1.25	20 mm	27	51	Galvanized	■
BS0DCN30	B415	M 14 x 1.25	20 mm	30	54	Galvanized	■
BS0DCN33	B411	M 14 x 1.25	20 mm	33	57	Galvanized	■
BS0DCN38	B412	M 14 x 1.25	20 mm	38	62	Galvanized	■
BS0DCN40	B416	M 14 x 1.25	20 mm	40	64	Galvanized	■
BS0DCN45	B413	M 14 x 1.25	20 mm	45	69	Galvanized	■
BS0DCN50	B414	M 14 x 1.25	20 mm	50	74	Galvanized	■

■ May not be in stock - please enquire.

ELLIS EXCELLENCE IN WHEEL ACCESSORIES

2.2 TUNER LUG BOLTS

VITE FISSAGGIO STELLARE / STERNFÖRMIGE BEFESTIGUNGSSCHRAUBE
TORNILLO DE FIJACION RADIAL / МНОГРАННЫЙ КРЕПЕЖНЫЙ БОЛТ

HEAD Ø	CONE	THREAD
20 MM	60° SEAT	M14x1.25 SIZE

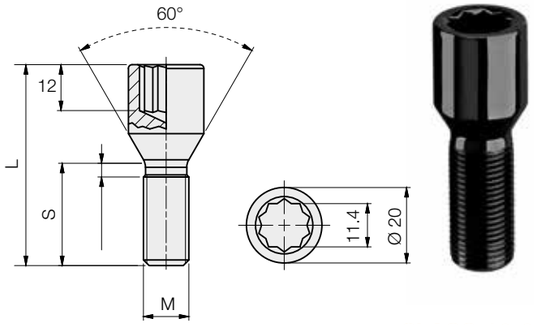

CLASS 10.9

Model code	Art.	Thread size	Head Ø	S	L	Finish	Stock
BS0DCN27ST23	B410B	M 14 x 1.25	20 mm	27	51	Special Black	■
BS0DCN30ST23	B415B	M 14 x 1.25	20 mm	30	54	Special Black	■
BS0DCN33ST23	B411B	M 14 x 1.25	20 mm	33	57	Special Black	■
BS0DCN38ST23	B412B	M 14 x 1.25	20 mm	38	62	Special Black	■
BS0DCN40ST23	B416B	M 14 x 1.25	20 mm	40	64	Special Black	■
BS0DCN45ST23	B413B	M 14 x 1.25	20 mm	45	69	Special Black	■
BS0DCN50ST23	B414B	M 14 x 1.25	20 mm	50	74	Special black	■

HEAD Ø	CONE	THREAD
20 MM	60° SEAT	M14x1.5 SIZE

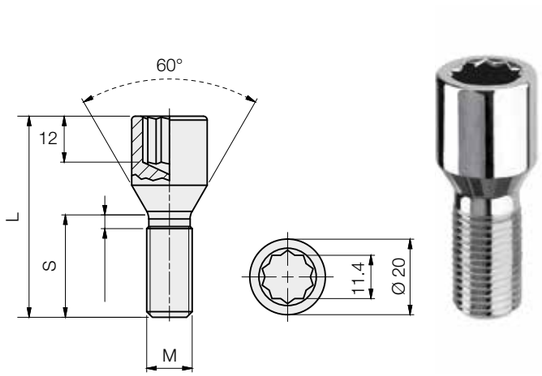

CLASS 10.9

Model code	Art.	Thread size	Head Ø	S	L	Finish	Stock
BS0ECN25	B400	M 14 x 1.5	20 mm	25	50	Galvanized	■
BS0ECN27	B401	M 14 x 1.5	20 mm	27	52	Galvanized	■
BS0ECN28	B402	M 14 x 1.5	20 mm	28	53	Galvanized	■
BS0ECN30	B403	M 14 x 1.5	20 mm	30	55	Galvanized	■
BS0ECN33	B404	M 14 x 1.5	20 mm	33	58	Galvanized	■
BS0ECN40	B405	M 14 x 1.5	20 mm	40	65	Galvanized	■
BS0ECN43	B409	M 14 x 1.5	20 mm	43	68	Galvanized	■
BS0ECN45	B406	M 14 x 1.5	20 mm	45	70	Galvanized	■
BS0ECN55	B407	M 14 x 1.5	20 mm	55	80	Galvanized	■

HEAD Ø	CONE	THREAD
20 MM	60° SEAT	M14x1.5 SIZE

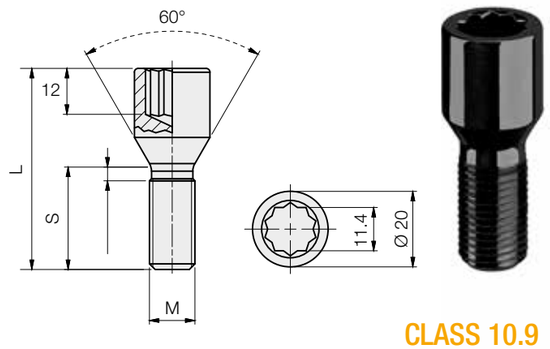

CLASS 10.9

Model code	Art.	Thread size	Head Ø	S	L	Finish	Stock
BS0ECN25ST23	B400B	M 14 x 1.5	20 mm	25	50	Special Black	■
BS0ECN28ST23	B402B	M 14 x 1.5	20 mm	28	53	Special Black	■
BS0ECN30ST23	B403B	M 14 x 1.5	20 mm	30	55	Special black	■
BS0ECN33ST23	B404B	M 14 x 1.5	20 mm	33	58	Special black	■
BS0ECN38ST23	B408B	M 14 x 1.5	20 mm	38	63	Special black	■
BS0ECN40ST23	B405B	M 14 x 1.5	20 mm	40	65	Special Black	■
BS0ECN45ST23	B406B	M 14 x 1.5	20 mm	45	70	Special black	■
BS0ECN50ST23	B430B	M 14 x 1.5	20 mm	50	75	Special black	■

HEAD Ø	CONE	THREAD
23 MM	60° SEAT	M12x1.25 SIZE

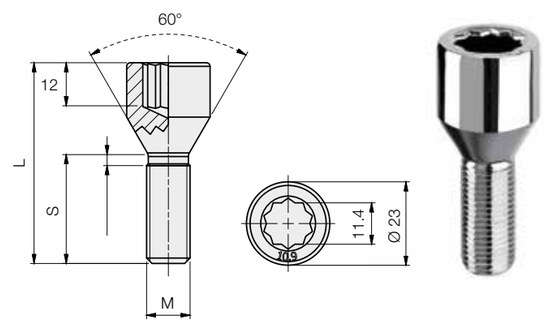

CLASS 10.9

Model code	Art.	Thread size	Head Ø	S	L	Finish	Stock
BS1ACN22	B475	M 12 x 1.25	23 mm	22	47.3	Galvanized	■
BS1ACN24	B476	M 12 x 1.25	23 mm	24	49.3	Galvanized	■
BS1ACN26	B477	M 12 x 1.25	23 mm	26	51.3	Galvanized	■
BS1ACN28	B478	M 12 x 1.25	23 mm	28	53.3	Galvanized	■
BS1ACN30	B479	M 12 x 1.25	23 mm	30	55.3	Galvanized	■
BS1ACN32	B480	M 12 x 1.25	23 mm	32	57.3	Galvanized	■
BS1ACN40	B481	M 12 x 1.25	23 mm	40	65.3	Galvanized	■
BS1ACN42	B482	M 12 x 1.25	23 mm	42	67.3	Galvanized	■
BS1ACN50	B483	M 12 x 1.25	23 mm	50	75.3	Galvanized	■

■ May not be in stock - please enquire.

2.2 TUNER LUG BOLTS

VITE FISSAGGIO STELLARE / STERNFÖRMIGE BEFESTIGUNGSSCHRAUBE
TORNILLO DE FIJACION RADIAL / МНОГРАННЫЙ КРЕПЕЖНЫЙ БОЛТ

HEAD Ø	CONE	THREAD
23 MM	60° SEAT	M12x1.5 SIZE

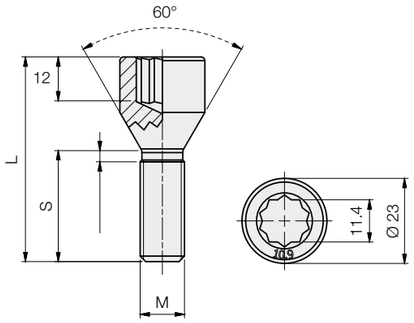

CLASS 10.9

Model code	Art.	Thread size	Head Ø	S	L	Finish	Stock
BS1BCN22	B450	M 12 x 1.5	23 mm	22	47.5	Galvanized	■
BS1BCN24	B451	M 12 x 1.5	23 mm	24	49.5	Galvanized	■
BS1BCN26	B452	M 12 x 1.5	23 mm	26	51.5	Galvanized	■
BS1BCN28	B453	M 12 x 1.5	23 mm	28	53.5	Galvanized	■
BS1BCN30	B454	M 12 x 1.5	23 mm	30	55.5	Galvanized	■
BS1BCN32	B455	M 12 x 1.5	23 mm	32	57.5	Galvanized	■
BS1BCN40	B456	M 12 x 1.5	23 mm	40	65.5	Galvanized	■
BS1BCN42	B457	M 12 x 1.5	23 mm	42	67.5	Galvanized	■
BS1BCN52	B458	M 12 x 1.5	23 mm	52	77.5	Galvanized	■

HEAD Ø	CONE	THREAD
23 MM	60° SEAT	M14x1.5 SIZE

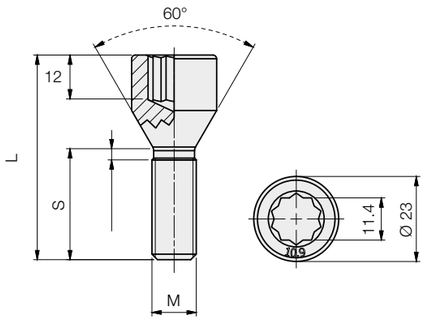

CLASS 10.9

Model code	Art.	Thread size	Head Ø	S	L	Finish	Stock
BS1ECN28	B500	M 14 x 1.5	23 mm	28	51.8	Galvanized	■
BS1ECN30	B501	M 14 x 1.5	23 mm	30	53.8	Galvanized	■
BS1ECN33	B502	M 14 x 1.5	23 mm	33	56.8	Galvanized	■
BS1ECN40	B503	M 14 x 1.5	23 mm	40	63.8	Galvanized	■
BS1ECN45	B504	M 14 x 1.5	23 mm	45	68.8	Galvanized	■
BS1ECN50	B505	M 14 x 1.5	23 mm	50	73.8	Galvanized	■
BS1ECN55	B506	M 14 x 1.5	23 mm	55	78.8	Galvanized	■

HEAD Ø	BALL	THREAD
23 MM	R14 SEAT	M14x1.5 SIZE

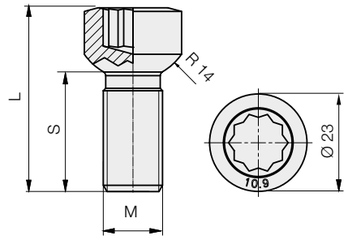

CLASS 10.9

Model code	Art.	Thread size	Head Ø	S	L	Finish	Stock
BS1ES428	B825	M 14 x 1.5	23 mm	28	43.5	Galvanized	■

■ May not be in stock - please enquire.

ELLIS®
EXCELLENCE
IN WHEEL ACCESSORIES

2.3 TUNER LUG BOLT ADAPTOR

ADATTATORE DADI STELLARI / STERNADAPTORMUTTER
ADAPTOR DE TUERCA RADIALES
АДАПТОР К МНОГОГРАННЫМ ГАЙКАМ

TUNER LUG BOLT ADAPTOR

HEIGHT
70
mm

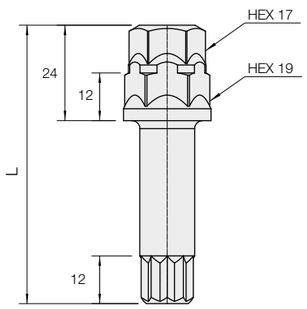

CLASS 10.9

Model code	Art.	Hex 1	Hex 2	L	Stock
AST171970	A101	17 mm	19 mm	70 mm	■

"Winning is everything. The only ones who remember you when you come second are your wife and your dog."
Damon Hill

WHEEL LOCK NUTS & BOLTS

3.1 LOCK BOLT KIT - CONE SEAT
3.2 LOCK BOLT KIT - BALL SEAT
3.3 OPEN LOCK NUT KIT
3.4 CLOSED LOCK NUT KIT

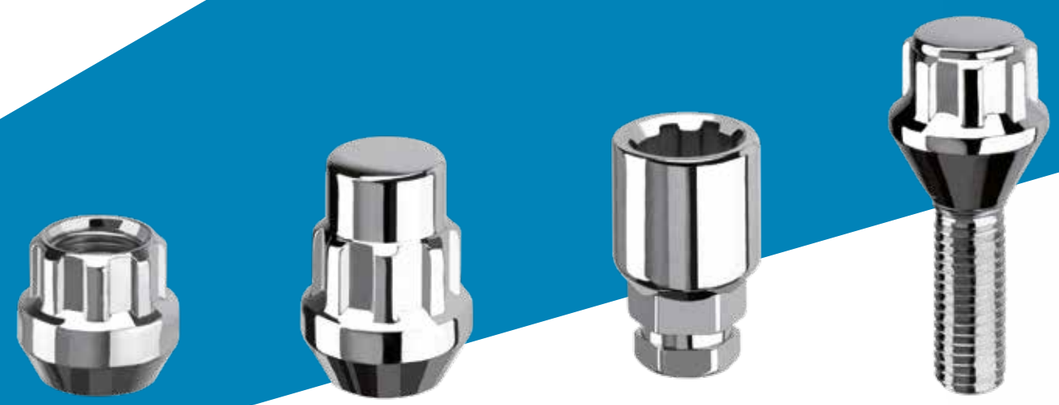

ELLIS EXCELLENCE IN WHEEL ACCESSORIES

ELLIS EXCELLENCE IN WHEEL ACCESSORIES

3.1 LOCK BOLT KIT - CONE SEAT

VITI ANTIFURTO - SEDE CONICA / FELGENSCHLOSS - KEGELBUND
TORNILLOS ANTIRROBO - ASIENTO CONICO / СЕКРЕТНЫЙ БОЛТ - КОНУС

HEX AD **17/19** MM | **LOCK BOLTS** | **CONE SEAT**

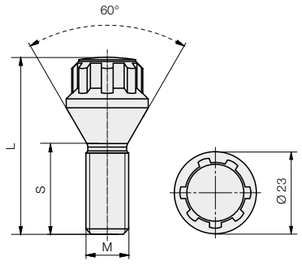

CLASS 10.9

Model code	Art.	Thread size	HEX AD	S	L	Finish	Stock
BTXBCN23AS	K100	M 12 x 1.5	17/19	23	49	Galvanized	■
BTXBCN25AS	K101	M 12 x 1.5	17/19	25	51	Galvanized	■
BTXBCN28AS	K121	M 12 x 1.5	17/19	28	52	Galvanized	■
BTXBCN30AS	K102	M 12 x 1.5	17/19	30	54	Galvanized	■
BTXBCN40AS	K103	M 12 x 1.5	17/19	40	64	Galvanized	■
BTXACN24AS	K104	M 12 x 1.25	17/19	24	50	Galvanized	■
BTXACN27AS	K105	M 12 x 1.25	17/19	27	52	Galvanized	■
BTXACN50AS	K106	M 12 x 1.25	17/19	50	75	Galvanized	■
BTXECN25AS	K110	M 14 x 1.5	17/19	25	50	Galvanized	■
BTXECN28AS	K122	M 14 x 1.5	17/19	28	53	Galvanized	■
BTXECN30AS	K111	M 14 x 1.5	17/19	30	55	Galvanized	■
BTXECN32AS	K112	M 14 x 1.5	17/19	32	58	Galvanized	■
BTXECN40AS	K113	M 14 x 1.5	17/19	40	66	Galvanized	■
BTXECN50AS	K114	M 14 x 1.5	17/19	50	76	Galvanized	■
BTXDCN27AS	K120	M 14 x 1.25	17/19	27	51	Galvanized	■

3.2 LOCK BOLT KIT - BALL SEAT

VITI ANTIFURTO - SEDE SFERICA / FELGENSCHLOSS - KUGELBUND
TORNILLOS ANTIRROBO - ASIENTO ESFERICO / СЕКРЕТНЫЙ БОЛТ - СФЕРА РАДИУС

HEX AD **17/19** MM | **LOCK BOLTS** | **BALL SEAT**

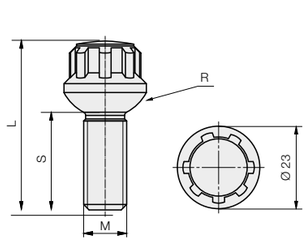

CLASS 10.9

Model code	Art.	Thread size	HEX AD	S	R	L	Finish	Stock
BTXBS227AS	K128	M 12 x 1.5	17/19	28	R12	51	Galvanized	■
BTXBS323AS	K125	M 12 x 1.5	17/19	23	R13	48	Galvanized	■
BTXBS327AS	K126	M 12 x 1.5	17/19	27	R13	51	Galvanized	■
BTXES227AS	K132	M 14 x 1.5	17/19	28	R12	51	Galvanized	■
BTXES328AS	K130	M 14 x 1.5	17/19	28	R13	51	Galvanized	■
BTXES430AS	K131	M 14 x 1.5	17/19	30	R14	53	Galvanized	■

ELLIS EXCELLENCE IN WHEEL ACCESSORIES

3.4 OPEN LOCK NUT KIT

DADO ANTIFURTO APERTO / DIEBSTAHLSICHERE MUTTER GEÖFFNET
TUERCAS DE FIJACION ABIERTAS / ОТКРЫТАЯ КОЛЕСНАЯ ГАЙКА

HEX AD **19/21** MM

LOCK NUTS

OPEN

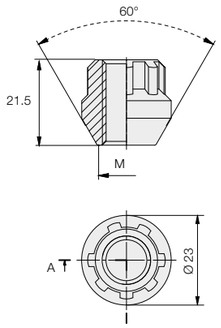

CLASS 10.9

Model code	Art.	Thread size	HEX AD	S	L	Finish	Stock
NTXHCN21A	K150	M 1/2 UNF	19/21	-	21.5	Galvanized	■
NTXACN21A	K151	M 12 x 1.25	19/21	-	21.5	Galvanized	■
NTXBCN21A	K152	M 12 x 1.5	19/21	-	21.5	Galvanized	■
NTXECN21A	K153	M 14 x 1.5	19/21	-	21.5	Galvanized	■

3.5 CLOSED LOCK NUT KIT

DADO ANTIFURTO CHIUSO / DIEBSTAHLSICHERE MUTTER GESCHLOSSEN
TUERCAS DE FIJACION CERRADAS / ЗАКРЫТАЯ КОЛЕСНАЯ ГАЙКА

HEX AD **19/21** MM

LOCK NUTS

CLOSED

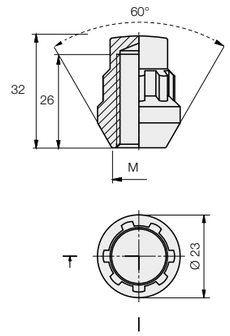

CLASS 10.9

Model code	Art.	Thread size	HEX AD	S	L	Finish	Stock
NTXHCN21B	K160	M 1/2 UNF	19/21	26	32	Galvanized	■
NTXACN21B	K161	M 12 x 1.25	19/21	26	32	Galvanized	■
NTXBCN21B	K162	M 12 x 1.5	19/21	26	32	Galvanized	■
NTXECN21B	K163	M 14 x 1.5	19/21	26	32	Galvanized	■

"To finish first,
you must first finish."
Juan Manuel Fangio

ELLIS
EXCELLENCE
IN WHEEL ACCESSORIES

WHEEL & HUB STUDS

4.1 SPLINE WHEEL STUDS
4.2 HUB STUDS

4.1 SPLINE WHEEL STUDS

PRIGIONIERI A PIANTARE / STEHBOLZEN
PRISIONERO A PLANTA / ШПИЛЬКА

THREAD
M12x1.25
SIZE

SPLINE WHEEL STUD

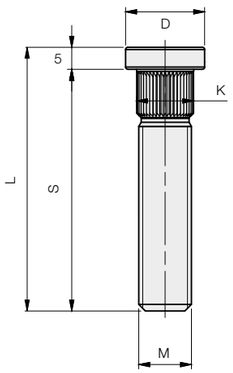

CLASS 10.9

Model code	Art.	S	L	K	D Ø	Finish	Stock
SW120A655	S110	65 mm	70 mm	**12 mm**	18 mm	Galvanized	■
SW142A605	S115	60 mm	65 mm	**14.2 mm**	18 mm	Galvanized	■
SW143A405	S100	40 mm	45 mm	**14.3 mm**	18 mm	Galvanized	■
SW143A525	S160	52 mm	57 mm	**14.3 mm**	18 mm	Galvanized	■
SW143A575	S161	57 mm	62 mm	**14.3 mm**	18 mm	Galvanized	■
SW143A625	S101	62 mm	67 mm	**14.3 mm**	18 mm	Galvanized	■

THREAD
M12x1.25
SIZE

K
12.9

SPLINE WHEEL STUD

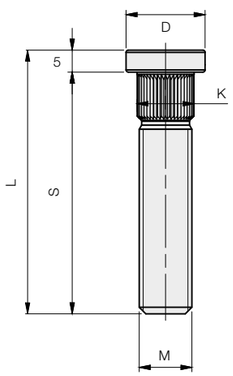

CLASS 10.9

Model code	Art.	S	L	K	D Ø	Finish	Stock
SW130A405ST27	S150G	39 mm	44 mm	**12.9 mm**	18 mm	Geomet	■
SW130A625ST27	S151G	62 mm	67 mm	**12.9 mm**	18 mm	Geomet	■

THREAD
M12x1.5
SIZE

SPLINE WHEEL STUD

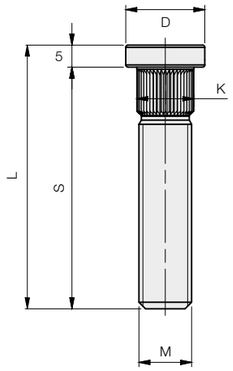

CLASS 10.9

Model code	Art.	S	L	K	D Ø	Finish	Stock
SW120B655	S111	65 mm	70 mm	**12 mm**	18 mm	Galvanized	■
SW124B525	S102	52 mm	57 mm	**12.4 mm**	18 mm	Galvanized	■
SW124B625	S103	62 mm	67 mm	**12.4 mm**	18 mm	Galvanized	■
SW130B355	S135	35 mm	40 mm	**13 mm**	18 mm	Galvanized	■
SW130B405	S104	40 mm	45 mm	**13 mm**	18 mm	Galvanized	■
SW130B505	S137	50 mm	55 mm	**13 mm**	18 mm	Galvanized	■
SW130B555	S105	55 mm	60 mm	**13 mm**	18 mm	Galvanized	■
SW130B655	S106	65 mm	70 mm	**13 mm**	18 mm	Galvanized	■
SW130B775	S112	77 mm	82 mm	**13 mm**	18 mm	Galvanized	■
SW140B655	S113	65 mm	70 mm	**14 mm**	18 mm	Galvanized	■
SW140B775	S114	77 mm	82 mm	**14 mm**	18 mm	Galvanized	■
SW143B375	S130	37 mm	42 mm	**14.3 mm**	18 mm	Galvanized	■
SW143B425	S107	42 mm	47 mm	**14.3 mm**	18 mm	Galvanized	■
SW143B625	S108	62 mm	67 mm	**14.3 mm**	18 mm	Galvanized	■
SW146B695	S116	69 mm	74 mm	**14.6 mm**	18 mm	Galvanized	■
SW148B625	S123	62 mm	67 mm	**14.8 mm**	18 mm	Galvanized	■

THREAD
M12x1.5
SIZE

SPLINE WHEEL STUD

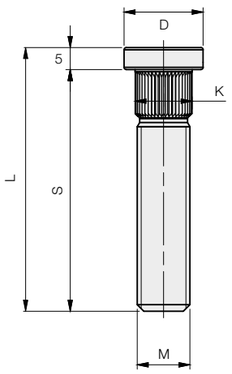

CLASS 10.9

Model code	Art.	S	L	K	D Ø	Finish	Stock
SW130B355ST27	S135G	35 mm	40 mm	**12.9 mm**	18 mm	Geomet	■
SW130B505ST27	S137G	50 mm	55 mm	**12.9 mm**	18 mm	Geomet	■
SW130B405ST27	S104G	40 mm	45 mm	**13 mm**	18 mm	Geomet	■
SW130B605ST27	S138G	60 mm	65 mm	**13 mm**	18 mm	Geomet	■
SW143B625ST27	S108G	62 mm	67 mm	**14.3 mm**	18 mm	Geomet	■

■ May not be in stock - please enquire.

4.1 SPLINE WHEEL STUDS

PRIGIONIERI A PIANTARE / STEHBOLZEN
PRISIONERO A PLANTA / ШПИЛЬКА

THREAD **M14x1.5** SIZE | **SPLINE WHEEL STUD**

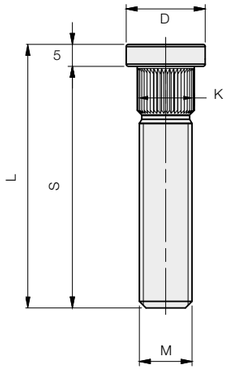

CLASS 10.9

Model code	Art.	S	L	K	D Ø	Finish	Stock
SW146E405	S145	40 mm	45 mm	**14.6 mm**	20 mm	Galvanized	■
SW149E455	S155	45 mm	50 mm	**14.9 mm**	20 mm	Galvanized	■
SW163E585	S119	58 mm	63 mm	**16.3 mm**	20 mm	Galvanized	■
SW163E785	S120	78 mm	83 mm	**16.3 mm**	20 mm	Galvanized	■

THREAD **M14x1.5** SIZE | K **14.6** | **SPLINE WHEEL STUD**

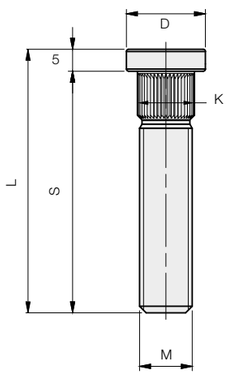

CLASS 10.9

Model code	Art.	S	L	K	D Ø	Finish	Stock
SW146E405ST27	S145G	40 mm	45 mm	**14.6 mm**	20 mm	Geomet	■
SW146E455ST27	S141G	45 mm	50 mm	**14.6 mm**	20 mm	Geomet	■
SW146E505ST27	S142G	50 mm	55 mm	**14.6 mm**	20 mm	Geomet	■
SW146E605ST27	S143G	60 mm	65 mm	**14.6 mm**	20 mm	Geomet	■
SW146E705ST27	S144G	70 mm	75 mm	**14.6 mm**	20 mm	Geomet	■

THREAD **1/2 UNF** SIZE | K **15.7** | **SPLINE WHEEL STUD**

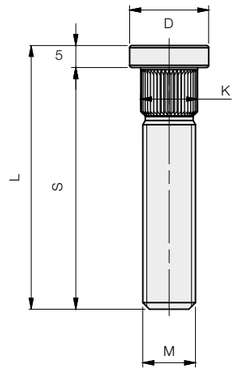

CLASS 10.9

Model code	Art.	S	L	K	D Ø	Finish	Stock
SW157H465	S109	46 mm	51 mm	**15.7 mm**	20 mm	Galvanized	■

THREAD **1/2 UNF** SIZE | K **15.7** | **SPLINE WHEEL STUD**

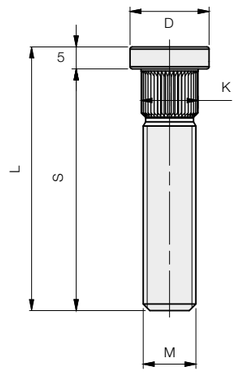

CLASS 10.9

Model code	Art.	S	L	K	D Ø	Finish	Stock
SW157H455ST27	S109G	45 mm	50 mm	**15.7 mm**	20 mm	Geomet	■

■ May not be in stock - please enquire.

ELLIS EXCELLENCE IN WHEEL ACCESSORIES

4.1 SPLINE WHEEL STUDS

PRIGIONIERI A PIANTARE / STEHBOLZEN
PRISIONERO A PLANTA / ШПИЛЬКА

THREAD **M14x2.0** SIZE | K **15.9** | **SPLINE WHEEL STUD**

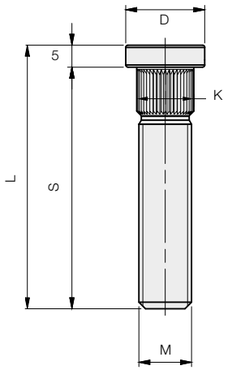

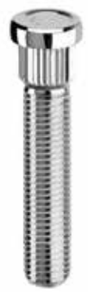

CLASS 10.9

Model code	Art.	S	L	K	D Ø	Finish	Stock
SW159G425	S117	42 mm	47 mm	**15.9 mm**	20 mm	Galvanized	■
SW159G625	S118	62 mm	67 mm	**15.9 mm**	20 mm	Galvanized	■

THREAD **M16x1.5** SIZE | K **17** | **SPLINE WHEEL STUD**

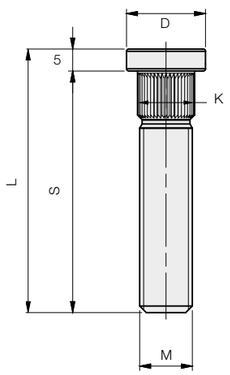

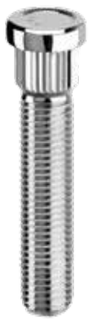

CLASS 10.9

Model code	Art.	S	L	K	D Ø	Finish	Stock
SW170L455	S121	45 mm	50 mm	**17 mm**	20 mm	Galvanized	■
SW170L485	S122	48 mm	53 mm	**17 mm**	20 mm	Galvanized	■

4.2 HUB STUDS

PRIGIONIERO A FISSARE / RADBOLZEN
PRISIONERO PARA FIJAR / ШПИЛЬКА

LENGTH **80/60** MM | THREAD **M12x1.25** SIZE | **HUB STUD**

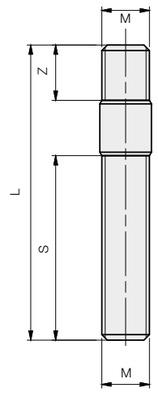

CLASS 10.9

Model code	Art.	S	L	Z	Finish	Stock
SH80A5015	S125	50 mm	80 mm	15 mm	Galvanized	■
SH60A3015	S128	30 mm	60 mm	15 mm	Galvanized	■

LENGTH **80/60** MM | THREAD **M12x1.25** SIZE | **HUB STUD**

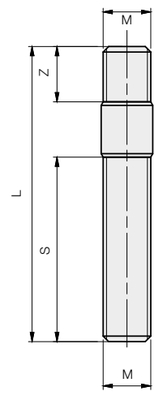

CLASS 10.9

Model code	Art.	S	L	Z	Finish	Stock
SH80A5015ST23	S125B	50 mm	80 mm	15 mm	Special Black	■
SH60A3015ST23	S128B	30 mm	60 mm	15 mm	Special Black	■

■ May not be in stock - please enquire.

4.2 HUB STUDS

PRIGIONIERO A FISSARE / RADBOLZEN
PRISIONERO PARA FIJAR / ШПИЛЬКА

LENGTH **80/60** MM | THREAD **M12x1.5** SIZE | **HUB STUD**

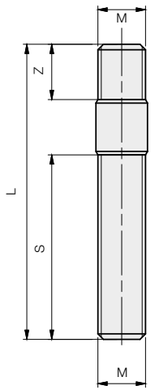

CLASS 10.9

Model code	Art.	S	L	Z	Finish	Stock
SH80B5015	S126	50 mm	80 mm	15 mm	Galvanized	■
SH60B3015	S129	30 mm	60 mm	15 mm	Galvanized	■

LENGTH **80/60** MM | THREAD **M12x1.5** SIZE | **HUB STUD**

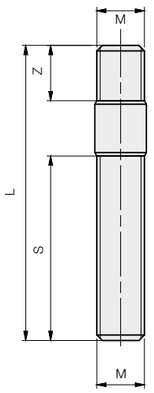

CLASS 10.9

Model code	Art.	S	L	Z	Finish	Stock
SH80B5015ST23	S126B	50 mm	80 mm	15 mm	Special Black	■
SH60B3015ST23	S129B	30 mm	60 mm	15 mm	Special Black	■

LENGTH **80** MM | THREAD **M14x1.5** SIZE | **HUB STUD**

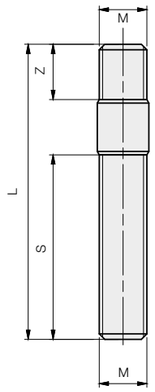

CLASS 10.9

Model code	Art.	S	L	Z	Finish	Stock
SH80E5015	S127	50 mm	80 mm	15 mm	Galvanized	■

LENGTH **80** MM | THREAD **M14x1.5** SIZE | **HUB STUD**

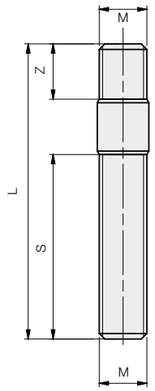

CLASS 10.9

Model code	Art.	S	L	Z	Finish	Stock
SH80E5015ST23	S127B	50 mm	80 mm	15 mm	Special Black	■

■ May not be in stock - please enquire.

4.2 HUB STUDS

PRIGIONIERO A FISSARE / RADBOLZEN
PRISIONERO PARA FIJAR / ШПИЛЬКА

LENGTH **68/90** MM | THREAD **M12x1.25** SIZE | **HUB STUD**

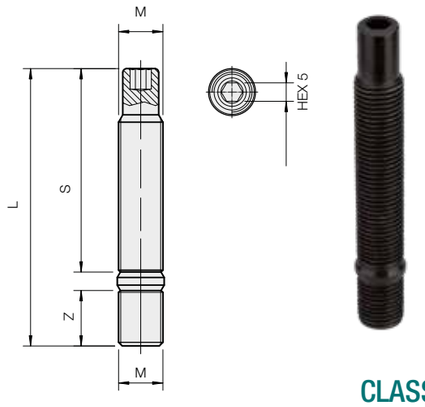

CLASS 10.9

Model code	Art.	S	L	Z	Finish	Stock
SH48A15H5ST23	S175B	48 mm	68 mm	15 mm	Special black	■
SH55A15H5ST23	S176B	55 mm	75 mm	15 mm	Special black	■
SH62A15H5ST23	S177B	62 mm	82 mm	15 mm	Special black	■
SH70A15H5ST23	S178B	70 mm	90 mm	15 mm	Special black	■

LENGTH **68/90** MM | THREAD **M12x1.5** SIZE | **HUB STUD**

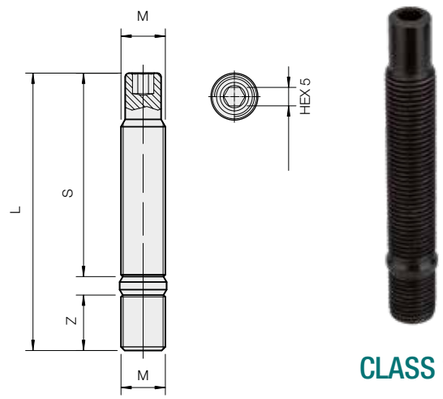

CLASS 10.9

Model code	Art.	S	L	Z	Finish	Stock
SH48B15H5ST23	S180B	48 mm	68 mm	15 mm	Special black	■
SH55B15H5ST23	S181B	55 mm	75 mm	15 mm	Special black	■
SH62B15H5ST23	S182B	62 mm	82 mm	15 mm	Special black	■
SH70B15H5ST23	S183B	70 mm	90 mm	15 mm	Special black	■

LENGTH **68/90** MM | THREAD **M14x1.25** SIZE | **HUB STUD**

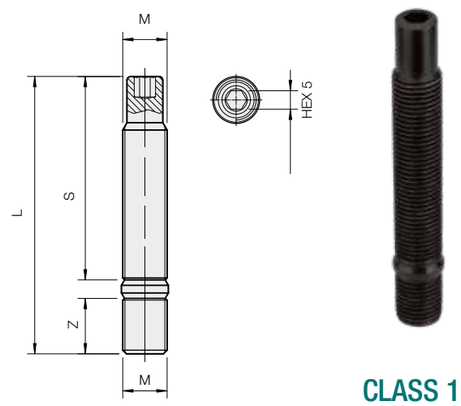

CLASS 10.9

Model code	Art.	S	L	Z	Finish	Stock
SH48D15H5ST23	S185B	48 mm	68 mm	15 mm	Special black	■
SH55D15H5ST23	S186B	55 mm	75 mm	15 mm	Special black	■
SH62D15H5ST23	S187B	62 mm	82 mm	15 mm	Special black	■
SH70D15H5ST23	S188B	70 mm	90 mm	15 mm	Special black	■

LENGTH **68/90** MM | THREAD **M14x1.5** SIZE | **HUB STUD**

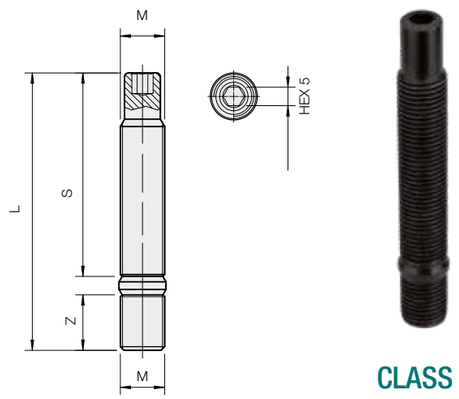

CLASS 10.9

Model code	Art.	S	L	Z	Finish	Stock
SH48E15H5ST23	S190B	48 mm	68 mm	15 mm	Special black	■
SH55E15H5ST23	S191B	55 mm	75 mm	15 mm	Special black	■
SH62E15H5ST23	S192B	62 mm	82 mm	15 mm	Special black	■
SH70E15H5ST23	S193B	70 mm	90 mm	15 mm	Special black	■

■ May not be in stock - please enquire.

"Each driver has his limit. My limit is a little bit further than others."
Ayrton Senna

HUB CENTRIC RINGS

5.1 HUB CENTRIC RINGS

5.1 HUB CENTRIC RINGS

ANELLI DI CENTRAGGIO / ZENTRIERRINGE
ANILLOS DE CENTRADO / ЦЕНТРАЛЬНЫЕ КОЛЬЦА

OUTER Ø
60,1

Model code	Outer Ø	Inner Ø	Material	Stock
PR601521	60,1	52,1	Plastic	■
PR601541	60,1	54,1	Plastic	■
PR601561	60,1	56,1	Plastic	■
PR601566	60,1	56,6	Plastic	■
PR601571	60,1	57,1	Plastic	■
PR601581	60,1	58,1	Plastic	■
PR601591	60,1	59,1	Plastic	■

Tolerance +/- 0,1 mm

OUTER Ø
63,3

Model code	Outer Ø	Inner Ø	Material	Stock
PR633521	63,3	52,1	Plastic	■
PR633541	63,3	54,1	Plastic	■
PR633561	63,3	56,1	Plastic	■
PR633566	63,3	56,6	Plastic	■
PR633571	63,3	57,1	Plastic	■
PR633581	63,3	58,1	Plastic	■
PR633591	63,3	59,1	Plastic	■
PR633596	63,3	59,6	Plastic	■
PR633601	63,3	60,1	Plastic	■

Tolerance +/- 0,1 mm

OUTER Ø
66,6

Model code	Outer Ø	Inner Ø	Material	Stock
PR666541	66,6	54,1	Plastic	■
PR666561	66,6	56,1	Plastic	■
PR666566	66,6	56,6	Plastic	■
PR666571	66,6	57,1	Plastic	■
PR666581	66,6	58,1	Plastic	■
PR666601	66,6	60,1	Plastic	■
PR666634	66,6	63,4	Plastic	■
PR666641	66,6	64,1	Plastic	■
PR666651	66,6	65,1	Plastic	■

Tolerance +/- 0,1 mm

OUTER Ø
67,1

Model code	Outer Ø	Inner Ø	Material	Stock
PR671521	67,1	52,1	Plastic	■
PR671541	67,1	54,1	Plastic	■
PR671561	67,1	56,1	Plastic	■
PR671566	67,1	56,6	Plastic	■
PR671571	67,1	57,1	Plastic	■
PR671581	67,1	58,1	Plastic	■
PR671591	67,1	59,1	Plastic	■
PR671596	67,1	59,6	Plastic	■
PR671601	67,1	60,1	Plastic	■
PR671634	67,1	63,4	Plastic	■
PR671641	67,1	64,1	Plastic	■
PR671651	67,1	65,1	Plastic	■
PR671661	67,1	66,1	Plastic	■

Tolerance +/- 0,1 mm

OUTER Ø
64

Model code	Outer Ø	Inner Ø	Material	Stock
PR640541	64	54,1	Plastic	■
PR640561	64	56,1	Plastic	■
PR640566	64	56,6	Plastic	■
PR640571	64	57,1	Plastic	■
PR640581	64	58,1	Plastic	■
PR640601	64	60,1	Plastic	■

Tolerance +/- 0,1 mm

OUTER Ø
65,1

Model code	Outer Ø	Inner Ø	Material	Stock
PR651521	65,1	52,1	Plastic	■
PR651541	65,1	54,1	Plastic	■
PR651561	65,1	56,1	Plastic	■
PR651566	65,1	56,6	Plastic	■
PR651571	65,1	57,1	Plastic	■
PR651581	65,1	58,1	Plastic	■
PR651591	65,1	59,1	Plastic	■
PR651596	65,1	59,6	Plastic	■
PR651601	65,1	60,1	Plastic	■
PR651634	65,1	63,4	Plastic	■

Tolerance +/- 0,1 mm

OUTER Ø
70

Model code	Outer Ø	Inner Ø	Material	Stock
PR700541	70	54,1	Plastic	■
PR700561	70	56,1	Plastic	■
PR700566	70	56,6	Plastic	■
PR700571	70	57,1	Plastic	■
PR700581	70	58,1	Plastic	■
PR700591	70	59,1	Plastic	■
PR700596	70	59,6	Plastic	■
PR700601	70	60,1	Plastic	■
PR700634	70	63,4	Plastic	■
PR700641	70	64,1	Plastic	■
PR700651	70	65,1	Plastic	■
PR700661	70	66,1	Plastic	■
PR700666	70	66,6	Plastic	■
PR700671	70	67,1	Plastic	■

Tolerance +/- 0,1 mm

OUTER Ø
70,1

Model code	Outer Ø	Inner Ø	Material	Stock
PR701561	70,1	56,1	Plastic	■
PR701566	70,1	56,6	Plastic	■
PR701571	70,1	57,1	Plastic	■
PR701581	70,1	58,1	Plastic	■
PR701601	70,1	60,1	Plastic	■
PR701634	70,1	63,4	Plastic	■
PR701641	70,1	64,1	Plastic	■
PR701651	70,1	65,1	Plastic	■
PR701661	70,1	66,1	Plastic	■
PR701666	70,1	66,6	Plastic	■
PR701671	70,1	67,1	Plastic	■
PR701691	70,1	69,1	Plastic	■

Tolerance +/- 0,1 mm

■ May not be in stock - please enquire.

ELLIS EXCELLENCE IN WHEEL ACCESSORIES

5.1 HUB CENTRIC RINGS

ANELLI DI CENTRAGGIO / ZENTRIERRINGE
ANILLOS DE CENTRADO / ЦЕНТРАЛЬНЫЕ КОЛЬЦА

OUTER Ø
70,4

Model code	Outer Ø	Inner Ø	Material	Stock
PR704541	70,4	54,1	Plastic	■
PR704566	70,4	56,6	Plastic	■
PR704664	70,4	66,4	Plastic	■
PR704666	70,4	66,6	Plastic	■
PR704671	70,4	67,1	Plastic	■

Tolerance +/- 0,1 mm

OUTER Ø
71,6

Model code	Outer Ø	Inner Ø	Material	Stock
PR716541	71,6	54,1	Plastic	■
PR716561	71,6	56,1	Plastic	■
PR716566	71,6	56,6	Plastic	■
PR716571	71,6	57,1	Plastic	■
PR716601	71,6	60,1	Plastic	■
PR716634	71,6	63,4	Plastic	■
PR716641	71,6	64,1	Plastic	■
PR716651	71,6	65,1	Plastic	■
PR716661	71,6	66,1	Plastic	■
PR716666	71,6	66,6	Plastic	■
PR716671	71,6	67,1	Plastic	■

Tolerance +/- 0,1 mm

OUTER Ø
72,6

Model code	Outer Ø	Inner Ø	Material	Stock
PR726541	72,6	54,1	Plastic	■
PR726561	72,6	56,1	Plastic	■
PR726566	72,6	56,6	Plastic	■
PR726571	72,6	57,1	Plastic	■
PR726581	72,6	58,1	Plastic	■
PR726596	72,6	59,6	Plastic	■
PR726601	72,6	60,1	Plastic	■
PR726634	72,6	63,4	Plastic	■
PR726641	72,6	64,1	Plastic	■
PR726651	72,6	65,1	Plastic	■
PR726661	72,6	66,1	Plastic	■
PR726666	72,6	66,6	Plastic	■
PR726671	72,6	67,1	Plastic	■
PR726691	72,6	69,1	Plastic	■

Tolerance +/- 0,1 mm

OUTER Ø
73,1

Model code	Outer Ø	Inner Ø	Material	Stock
PR731521	73,1	52,1	Plastic	■
PR731541	73,1	54,1	Plastic	■
PR731561	73,1	56,1	Plastic	■
PR731566	73,1	56,6	Plastic	■
PR731571	73,1	57,1	Plastic	■
PR731581	73,1	58,1	Plastic	■
PR731586	73,1	58,6	Plastic	■
PR731591	73,1	59,1	Plastic	■
PR731596	73,1	59,6	Plastic	■
PR731601	73,1	60,1	Plastic	■
PR731634	73,1	63,4	Plastic	■
PR731641	73,1	64,1	Plastic	■
PR731651	73,1	65,1	Plastic	■
PR731661	73,1	66,1	Plastic	■
PR731666	73,1	66,6	Plastic	■
PR731671	73,1	67,1	Plastic	■
PR731691	73,1	69,1	Plastic	■
PR731716	73,1	71,6	Plastic	■

Tolerance +/- 0,1 mm

OUTER Ø
72

Model code	Outer Ø	Inner Ø	Material	Stock
PR720541	72	54,1	Plastic	■
PR720571	72	57,1	Plastic	■
PR720601	72	60,1	Plastic	■
PR720634	72	63,4	Plastic	■
PR720651	72	65,1	Plastic	■
PR720666	72	66,6	Plastic	■
PR720671	72	67,1	Plastic	■

Tolerance +/- 0,1 mm

OUTER Ø
72,2

Model code	Outer Ø	Inner Ø	Material	Stock
PR722541	72,2	54,1	Plastic	■
PR722561	72,2	56,1	Plastic	■
PR722566	72,2	56,6	Plastic	■
PR722571	72,2	57,1	Plastic	■
PR722581	72,2	58,1	Plastic	■
PR722601	72,2	60,1	Plastic	■
PR722634	72,2	63,4	Plastic	■
PR722641	72,2	64,1	Plastic	■
PR722651	72,2	65,1	Plastic	■
PR722661	72,2	66,1	Plastic	■
PR722666	72,2	66,6	Plastic	■
PR722671	72,2	67,1	Plastic	■

Tolerance +/- 0,1 mm

OUTER Ø
74,1

Model code	Outer Ø	Inner Ø	Material	Stock
PR741541	74,1	54,1	Plastic	■
PR741561	74,1	56,1	Plastic	■
PR741566	74,1	56,6	Plastic	■
PR741571	74,1	57,1	Plastic	■
PR741581	74,1	58,1	Plastic	■
PR741591	74,1	59,1	Plastic	■
PR741596	74,1	59,6	Plastic	■
PR741601	74,1	60,1	Plastic	■
PR741634	74,1	63,4	Plastic	■
PR741641	74,1	64,1	Plastic	■
PR741651	74,1	65,1	Plastic	■
PR741666	74,1	66,6	Plastic	■
PR741671	74,1	67,1	Plastic	■
PR741691	74,1	69,1	Plastic	■
PR741716	74,1	71,6	Plastic	■
PR741726	74,1	72,6	Plastic	■

Tolerance +/- 0,1 mm

OUTER Ø
76

Model code	Outer Ø	Inner Ø	Material	Stock
PR760571	76	57,1	Plastic	■
PR760601	76	60,1	Plastic	■
PR760651	76	65,1	Plastic	■
PR760661	76	66,1	Plastic	■
PR760666	76	66,6	Plastic	■
PR760671	76	67,1	Plastic	■
PR760726	76	72,6	Plastic	■

Tolerance +/- 0,1 mm

■ May not be in stock - please enquire.

ORIGINAL EQUIPMENT ACCESSORIES

ORIGINAL EQUIPMENT ACCESSORIES

ALFA ROMEO

Model	OEM Part Nr.	Picture	Art. Nr.	Finish	Thread	Seat	Hex	S	Pg
147, GTA, GT (937) 156, GTA, Sportwagon (932) 164 (164) 166 (936) MiTo (955) Spider, Coupé, GTV (916_)	11294235 13230425 13230435		B140	Galvanized	M 12 x 1.25	Cone 60°	17	22	58
			B140G	Geomet	M 12 x 1.25	Cone 60°	17	22	58
159 (939) Brera (939) Spider (939) Stelvio (949)	606 974 42 606 941 02		B151G	Geomet	M 14 x 1.5	Cone 60°	17	25	63

AUDI

Model	OEM Part Nr.	Picture	Art. Nr.	Finish	Thread	Seat	Hex	S	Pg
A4 Cabrio (8H, 8K) S4 (8E) A5 Cabrio (B8, B9) S5 S5 Cabrio RS5 (B8) A6 (4B, 4F) A6 Allroad (4B) A6 quattro (4F, 4G) A6 cabrio (4F2, 4F5) S6 RS6 (4B, 4F, 4G) A7 (4G, F2) A8 (4D from '01) A8 Quattro (8D from '01) S8 TT (8N, 8J, 8S)	4D0 601 139 A		B1390	Galvanized	M 14 x 1.5	R13	17	27	85

ORIGINAL EQUIPMENT ACCESSORIES

AUDI

Model	OEM Part Nr.	Picture	Art. Nr.	Finish	Thread	Seat	Hex	S	Pg
A8 (4H armoured cars only) Q3 (8U, F3) Q5 (8R, FY) Q7 (4M) Q8 (4M)	8R0 601 295		B1286	Geomet	M 14 x 1.5	R14	17	30	85
A1, S1 (8X) A2 (8Z) A3, S3 (8L), (8P), (8V) A4, S4, RS4 (B5), (B6), (B7), (B8) A5, S5 (B8) A6 (C4), (C5), (C6), (C7) A7 (4G) A8 (4D), (4E) TT, TTS (8N), (8J) RS5 (B8) RS6 (C5), (C6), (C7) RS7(4G)	WHT 001812 WHT 002437 431601139 A 443601139 A 443601139 C 8D0601139 A 8D0601139 D		B950	Galvanized	M 14 x 1.5	R13	17	27	79
R8, (V8), (V10) A8, S8 (4D), (4E), (4H) Q3, RSQ3 (8U) Q5, SQ5 (8R)	WHT 002438 4D0601137 4D0601139 A 8R0601295		B650	Galvanized	M 14 x 1.5	R14	19	28	95
			B650B	Special Black	M 14 x 1.5	R14	19	28	96

ELLIS EXCELLENCE IN WHEEL ACCESSORIES

ORIGINAL EQUIPMENT ACCESSORIES

AUDI

Model	OEM Part Nr.	Picture	Art. Nr.	Finish	Thread	Seat	Hex	S	Pg
Q7 (4L)	WHT 001693		B652	Galvanized	M 14 x 1.5	R14	19	37	95

BMW

Model	OEM Part Nr.	Picture	Art. Nr.	Finish	Thread	Seat	Hex	S	Pg
5 serie (E12)	36131113132		N301	Galvanized	M 12 x 1.5	Cone 60°	19	30	31
X5 (G05) X6 (MY 2019) X7 (MY 2019) 7 serie (F03) i3 (MY 2019) i8 (MY 2019)	36136795153		B1360	Special black	M 14 x 1.25	Cone 60°	17	28	88
1er (F20), (F21) 2er (F22), (F45) 3er (F30), (F31), (F34), (F35), (F80) 4er (F32), (F33), (F36), (F82), (F83) 5er (F07), (F10), (F11), (F18) 6er (F06), (F12), (F13) 7er (F01), (F02), (F03), (F04) X3 (F25) X4 (F26) X5 (F15) X6 (F16), (E71), (E72)	36136774896 36136781151	 	B175 B175B B185	Galvanized Special Black Black	M 14 x 1.25 M 14 x 1.25 M 14 x 1.25	Cone 60° Cone 60° Cone 60°	17 17 17	28 28 27	61 62 62

ORIGINAL EQUIPMENT ACCESSORIES

BMW

Model	OEM Part Nr.	Picture	Art. Nr.	Finish	Thread	Seat	Hex	S	Pg
1er (E81), (E82), (E87), (E88) 3er (E21), (E30), (E36), (E46), (E90), (E91), (E92), (E93) 5er (E12), (E28), (E34), (E39), (E60), (E61) 6er (E24), (E63), (E64) 7er (E23), (E32), (E38), (E65), (E66), (E67) 8er (E31) X1 (E84) Z1 Z3 (E36) Z4 (E85), (E86) Z8(E52)	36131095390 36131122158 36131126014 36136781150	 	B103 B103B	Galvanized Special Black	M 12 x 1.5 M 12 x 1.5	Cone 60° Cone 60°	17 17	26 26	59 60

CHEVROLET

Model	OEM Part Nr.	Picture	Art. Nr.	Finish	Thread	Seat	Hex	S	Pg
Aveo (KLAS, KL1T) Cruze (KL1J) HHR (LT) Orlando (KL1Y) Trax (KL1B)	09594682		N1100	Galvanized	M 12 x 1.5	Cone 60°	19	36	35
Spark Matiz	94515470 94515410		N100	Galvanized	M 12 x 1.25	Cone 60°	17	23	19
Aveo (KLAS, KL1T) Cruze (KL1J) HHR (LT) Orlando (KL1Y) Trax (KL1B)	94515412		SN176	Galvanized	M 12 x 1.5	Cone 60°	19	25	27

ORIGINAL EQUIPMENT ACCESSORIES

CITROËN

Model	OEM Part Nr.	Picture	Art. Nr.	Finish	Thread	Seat	Hex	S	Pg
AX (ZA) Saxo (S0, S1) Xantia (X1, X2) Xsara (N6) Xsara Picasso©	5405.35		B1100	Galvanized	M 12 x 1.25	Flat	19	35	95
Berlingo (7, TU) Berlingo 3 Tepee (TU) C4 (L, N) C4 Cactus (O) C4 coupè (L) C4 Picasso (U) C4 Grand Picasso (U) C5 (6FZ, R) DS4 (N) Jumpy 3 (270)	5405.72 16 087 344 80		B1370	Geomet	M 12 x 1.25	Cone 60°	17	26	87
AX (ZA) Berlingo (NFU) Saxo (S0, S1) Xantia (X1, X2) Xsara (N6) Xsara picasso ©	5405.55		B276	Galvanized	M 12 x 1.25	Cone 60°	19	26	89
Berlingo (M_) C-Elysee C2 (JM_) C3 I/II/Pluriel/Picasso (FC_), (HB_) C4 I/II/Picasso/Grand Picasso (LC_), (LA_), (B7), (UD_), (UA_)	5405.67		B1075	Geomet	M 12 x 1.25	Flat	17	35	83

ORIGINAL EQUIPMENT ACCESSORIES

CITROËN

Model	OEM Part Nr.	Picture	Art. Nr.	Finish	Thread	Seat	Hex	S	Pg
C5 I/II/III/ (DC_), (DE_), (RC_), (RE_), (RD_), (TD_) C6 (TD_) DS3 DS4 DS5 Jumpy Saxo (S0), (S1) Xsara (N0), (N1), (N2), (N68)	5405.66 5405.84		B126	Galvanized	M 12 x 1.25	Cone 60°	17	26	58
C1 (PM, PN)	5405.77		B100	Galvanized	M 12 x 1.5	Cone 60°	17	21	59
C1 (PM, PN, 580W)	5405.85		B1151	Geomet	M 12 x 1.5	Flat	17	32,5	84
C8 (E) Jumpy (B until '06)	5405.68 5405.69		B151G	Geomet	M 14 x 1.5	Cone 60°	17	25	63

ORIGINAL EQUIPMENT ACCESSORIES

CITROËN

Model	OEM Part Nr.	Picture	Art. Nr.	Finish	Thread	Knurl	Hex	S	Pg
C-Crosser (V) C Zero (1) C4 Aircross (B)	3714.28		S107	Galvanized	M 12 x 1.5	14,3		42	117
C-Crosser (V) C Zero (1) C4 Aircross (B)	5405.81		N476	Yellow galv.	M 12 x 1.5	Cone 60°	21	16	39
C - Crosser (V) C4 Aircross (B)	5405.82		N1000	Chrome plated	M 12 x 1.5	Flat	21	37,5	46

DACIA

Model	OEM Part Nr.	Picture	Art. Nr.	Finish	Thread	Seat	Hex	S	Pg
Dokker (SD) Duster (SD) Lodgy (SD) Logan (SD, SR) Sandero (SD, SR)	82 00 473 353 82 00 610 460 40 22 22 121R		B103	Galvanized	M 12 x 1.5	Cone 60°	17	26	59

ORIGINAL EQUIPMENT ACCESSORIES

DAIHATSU

Model	OEM Part Nr.	Picture	Art. Nr.	Finish	Thread	Seat	Hex	S	Pg
Charade (XP9F) Cuore (L2, L27) Materia (M4) Sirion (M3) Terios (J2) Trevis (L65)	90942-01007		N476	Yellow galv.	M 12 x 1.5	Cone 60°	21	16	39

FIAT

Model	OEM Part Nr.	Picture	Art. Nr.	Finish	Thread	Seat	Hex	S	Pg
Scudo (220) Ulysse (179)	1.493.974.080		B151G	Geomet	M 14 x 1.5	Cone 60°	17	25	63
Scudo (270 from 11/2007)	9.634.648.980		B1370	Geomet	M 12 x 1.25	Cone 60°	17	26	87
Fullback (KT0T)	MR 455707		N1000	Chrome plated	M 12 x 1.5	Flat	21	37.5	46

ORIGINAL EQUIPMENT ACCESSORIES

FIAT

Model	OEM Part Nr.	Picture	Art. Nr.	Finish	Thread	Seat	Hex	S	Pg
Scudo (270 from 11/2007)	9.644.576.680		B1075	Geomet	M 12 x 1.25	Flat	17	35	83
Bravo (198) Doblo (119), (152), (223), (263) Idea Multipla (186) Panda (141_), (169) Punto (176_), (188_) Stilo/Multiwagon (192) 500/500 C	11294235 13230325 13230425 13230435		B140G	Geomet	M 12 x 1.25	Cone 60°	17	22	58
			B140	Galvanized	M 12 x 1.25	Cone 60°	17	22	58
Punto Evo/Grande Punto (199_) Croma (194) Sedici	51732885		B120	Galvanized	M 12 x 1.5	Cone 60°	17	22	61

ORIGINAL EQUIPMENT ACCESSORIES

FORD

Model	OEM Part Nr.	Picture	Art. Nr.	Finish	Thread	Seat	Hex	S	Pg
B-Max (JK8) Ecosport (JK8) Escort (AT0, GT0) Fiesta (GFJ, JAS, JH1, JA8) Focus (DAW, DA3, DYB) Grand C-Max (DM2, DXA) Ka (RBT) Ka+ (16) Kuga (DM2) Mondeo (GBP, B4Y, BA7) Puma (ECT) Scorpio (GFR, GGR)	6.040.307 5.114.405 1.007.487		SN2260	Galvanized	M 12 x 1.5	Cone 60°	19	15	24
B-Max (from 01/2012) Fiesta (from 05/2012) C-Max (from 01/2012) Grand C-Max (from 01/2012) Focus (from 11/2012) Ecosport (JK8) Mondeo (from 02/2015) Ranger (2AB) Tourneo Courier (from 02/2015) Tourneo Connect (from 11/2013) Ka+ (16) Kuga (from 10/2012) Transit Courier (from 09/2013) Transit Connect (02/2015)	5.114.407		N1110	Zinc-Nickel	M 12 x 1.5	Cone 60°	19	30	33
B-Max (JK8) C-Max (DM2, DXA) Cougar (BCV) Fiesta (J5S, JVS, JD3, JH1, JC3,JA8, JR8) Focus (DA3, DB3, DYB, DAW, DBW) Kuga (DM2) Mondeo (BA7, B4Y, B5Y)	6.111.766 1.454.051		N1111	Zinc-Nickel	M 12 x 1.5	Cone 60°	19	30	34

ORIGINAL EQUIPMENT ACCESSORIES

FORD

Model	OEM Part Nr.	Picture	Art. Nr.	Finish	Thread	Seat	Hex	S	Pg
Galaxy (WGR from 1995 to 2000)	7.201.016		B1025	Phosphated	M 14 x 1.5	R14	19	34	93
Galaxy (WGR from 2000 to 2007)	1.126.877		B1380	Geomet	M 14 x 1.5	R14	19	34	97
Galaxi (WA6) S-Max (WA6)	1.377.748 1.889.420		N1112	Zinc-Nickel	M 14 x 1.5	Cone 60°	21	17	39
Galaxi (WA6 from 2006 to 2011) S-Max (WA6 from 2006 to 2011)	1.428.137 1.377.747		N1113	Galvanized	M 14 x 1.5	Cone 60°	21	34	42
Transit 2013	1.811.812		N1114	Zinc-Nickel	M 14 x 1.5	Flat	21	25	40

ORIGINAL EQUIPMENT ACCESSORIES

FORD

Model	OEM Part Nr.	Picture	Art. Nr.	Finish	Thread	Seat	Hex	S	Pg
Transit 2014 (single wheels only)	5.196.786		N1115	Zinc-Nickel	M 14 x 1.5	Cone 60°	21	42.5	44
Edge (SBF) S-Max (WA6 from MY2015) Galaxi (WA6 from MY2015)	5.275.544		N1116	Zinc-Nickel	M 14 x 1.5	Cone 60°	21	36.5	43
Galaxy, S-Max (WA6)	1377747 1428137 1676176		N513	Galvanized	M 14 x 1.5	Cone 60°	21	34	42
Focus, Focus ST/RS (DA_), (DB_), (DF_), (DN_), (DY_) Granada, Consul (G__) KA, StreetKA (RBT), (RL2) Mondeo (AP), (BA7), (B_P), (B_Y) Puma (ECT)	6111766 1454051		N311	Galvanized	M 12 x 1.5	Cone 60°	19	30	32
Ranger (2A_) Scorpio (GAE_), (GGE_), (GGR), (GFR), (GNR) Sierra (BE__), (BF__), (BNG), (GBG)	1007487 1447852 1470843 6040307		N226	Phosphated	M 12 x 1.5	Cone 60°	19	15	24

ORIGINAL EQUIPMENT ACCESSORIES

FORD

Model	OEM Part Nr.	Picture	Art. Nr.	Finish	Thread	Knurl	Hex	S	Pg
B-Max, EcoSport (JK8) Cougar (BCV) Escort I-VII, Orion (ABLC4), (A__), (B__), (GA_) Fiesta, Fusion (FBD), (GFJ), (J__), (WFBT), (GFBT) C-Max, Kuga (DM2), (DXA)	W700678-S442 1359311 1629657 6168108		S104	Galvanized	M 12 x 1.5	13		40	117

HONDA

Model	OEM Part Nr.	Picture	Art. Nr.	Finish	Thread	Seat	Hex	S	Pg
Accord VII CL7, CN9, CN1-2, CM1-2 Accord VIII CU1-3, CW1-3 Civic VIII FK1-3, FN1-4, FD1, FD3-7 Civic IX 9. Generation CR-V III RE5, RE6, RE7 CR-Z ZF1 JAZZ III GG1-6, GE6, GP1	90381-SL5-901		N276	Galvanized	M 12 x 1.5	R 12	19	18	28
	90304-SC2-000		N326	Galvanized	M 12 x 1.5	R 12	19	27	35

HYUNDAI

Model	OEM Part Nr.	Picture	Art. Nr.	Finish	Thread	Seat	Hex	S	Pg
Atos (MX) Accent (LC, MC, MCT) Elantra (XD) Coupè (GK, J-2, RD) Getz (TB, TBI) i 10 (IA, PA) i 20 (PB, PBT) i 30 (FD, FDH) i 40 (VF) iX 20 (JC) iX 35 (EL, LM) Kona (OS) Matrix (FC, FCT) Tucson (JM, TL)	52950-14140 52950-M1000 52951-31330		N1117	Chrome plated	M 12 x 1.5	Cone 60°	21	28	45

ORIGINAL EQUIPMENT ACCESSORIES

HYUNDAI

Model	OEM Part Nr.	Picture	Art. Nr.	Finish	Thread	Seat	Hex	S	Pg
Atos (MX) Accent (LC, MC, MCT) Elantra (XD) Coupè (GK, J-2, RD) Getz (TB, TBI) i 10 (IA, PA) i 20 (PB, PBT) i 30 (FD, FDH) iX 35 (EL, LM) Kona (OS) Matrix (FC, FCT) Tucson (JM, TL)	52950-3Y000 52950-17000 52951-11210 52950-11210 52951-11220		N1118	Chrome plated	M 12 x 1.5	Cone 60°	21	34	45

JAGUAR

Model	OEM Part Nr.	Picture	Art. Nr.	Finish	Thread	Seat	Hex	S	Pg
E-pace (DF) F-pace (DC, X761)	T4A2670		N1113	Galvanized	M 14 x 1.5	Cone 60°	21	34	42

KIA

Model	OEM Part Nr.	Picture	Art. Nr.	Finish	Thread	Seat	Hex	S	Pg
Carens (FC) Carnival (MB) Ceed (CD) Niro (DE) Picanto (TA) Rio (DC, DE, UB) Sorento (XM, UM) Soul (AM, PS) Sportage (QL, QLE) Stonic (YB) Venga (XN, XNS)	52950-14140 52950-M1000 52950-1G000 52950-H1000		N1117	Chrome plated	M 12 x 1.5	Cone 60°	21	28	45

ORIGINAL EQUIPMENT ACCESSORIES

KIA

Model	OEM Part Nr.	Picture	Art. Nr.	Finish	Thread	Seat	Hex	S	Pg
Carens (FC) Carnival (MB) Ceed (CD) Niro (DE) Picanto (TA) Rio (DC, DE, UB) Sorento (XM, UM) Soul (AM, PS) Sportage (QL, QLE) Stonic (YB) Venga (XN, XNS)	52950-3Y000 52950-17000 52951-11210 52950-11210 52951-11220		N1118	Chrome plated	M 12 x 1.5	Cone 60°	21	34	45

LANCIA

Model	OEM Part Nr.	Picture	Art. Nr.	Finish	Thread	Seat	Hex	S	Pg
Delta 3 (844) Kappa (838) Lybra (839) Musa (350) Y (840, 312) Ypsilon (843, 846)	13.230.425		B140G	Geomet	M 12 x 1.25	Cone 60°	17	22	58

LAND ROVER

Model	OEM Part Nr.	Picture	Art. Nr.	Finish	Thread	Seat	Hex	S	Pg
Defender (up to 2006) Discovery 1 Range Rover Classic	ANR2763MMM		N1119	Galvanized	M 16 x 1.5	Flat	27	53	50

ORIGINAL EQUIPMENT ACCESSORIES

LAND ROVER

Model	OEM Part Nr.	Picture	Art. Nr.	Finish	Thread	Seat	Hex	S	Pg
Discovery 2	ANR3679		N1122	Galvanized	M 14 x 1.5	Flat	22	41	49
Defender (from 2007)	RRD500560		N1121	Galvanized	M 14 x 1.5	Flat	27	53	50
Discovery 3 and 4 Range Rover Sport (LS, LW) Range Rover Vogue (LM, LG)	RRD500590 LR068126		N1120	Galvanized	M 14 x 1.5	Flat	22	47	48
Range Rover Evoque	LR001381		N1113	Galvanized	M 14 x 1.5	Cone 60°	21	34	42

LEXUS

Model	OEM Part Nr.	Picture	Art. Nr.	Finish	Thread	Knurl	Hex	S	Pg
CT (A10) GS (ZS16_), (S19_)	90942-02049		S107	Galvanized	M 12 x 1.5	14.3		42	117

ORIGINAL EQUIPMENT ACCESSORIES

MAZDA

Model	OEM Part Nr.	Picture	Art. Nr.	Finish	Thread	Seat	Hex	S	Pg
121 (DB, DW) 323 (BF, BW) 626 (GC, GD, GV, GE, GF, GW) CX-5 CX-7 CX-9 Demio 2 (DE, DJ, DL) 3 (BK, BL, BM, BN) 5 (CR, CW) 6 (GG, GY, GH, GJ, GL) MX-3 (EC) MX-5 (NA, NB, NC, ND) MX-6 (GD, GE)	0B002-37-160 B002-37-160B B002-37-160 B002-37-160A B002-37-160X KA78-37-160 KA79-37-160 KB77-37-160 UH72-37-160 UH73-37-160 UR58-37-160		N1117	Chrome plated	M 12 x 1.5	Cone 60°	21	28	45
121 (DB, DW) 323 (BF, BW) 626 (GC, GD, GV, GE, GF, GW) CX-5 CX-7 CX-9 Demio 2 (DE, DJ, DL) 3 (BK, BL, BM, BN) 5 (CR, CW) 6 (GG, GY, GH, GJ, GL) MX-3 (EC) MX-5 (NA, NB, NC, ND) MX-6 (GD, GE)	0603-26-161A 0603-26-161 0603-26-161X		N1118	Chrome plated	M 12 x 1.5	Cone 60°	21	34	45

ORIGINAL EQUIPMENT ACCESSORIES

MAZDA

Model	OEM Part Nr.	Picture	Art. Nr.	Finish	Thread	Seat	Hex	S	Pg
Mazda 2 DY, DE 3 BK, BL, BM 5 CRI, CW 6 GG, GGI, GJ 121 JASM 323 BF, BG, BA, BJ 626 GF MPW LW MX3 EC MX5 NA, NB, NC MX6 Premacy CP RX-7 Demio DW	0603 26 161 A B002-37-160B		N476	Yellow galv.	M 12 x 1.5	Cone 60°	21	16	39
			N500	Galvanized	M 12 x 1.5	Cone 60°	21	30	41

MERCEDES

Model	OEM Part Nr.	Picture	Art. Nr.	Finish	Thread	Seat	Hex	S	Pg
Sprinter 616 (905) Vario 512 (667) 612 (668) 814 (670) 815 (670) 609 (668) 709 (669)	074361 014205		N1130	Galvanized	M 14 x 1.5	Flat	19	16	31
Class A (168) C (202, 203) CLK (208, 209) E (210) SL (129) SLK (170, 171) Vaneo (414) 190 (201) 200 (124)	170 401 01 70 201 401 02 70 000 990 45 07 210 401 02 70		B850	Galvanized	M 12 x 1.5	R12	17	21	77

ELLIS EXCELLENCE IN WHEEL ACCESSORIES

ORIGINAL EQUIPMENT ACCESSORIES

MERCEDES

Model	OEM Part Nr.	Picture	Art. Nr.	Finish	Thread	Seat	Hex	S	Pg
Class S (140)	140 401 02 70		B925	Galvanized	M 14 x 1.5	R12	17	25.9	78
Class A (176) B (246) C (204, 205) CLA (117, 218) E (207, 212) GL (164, 166) GLA (156) GLK (204) ML (164 and 166 steel wheels only) SL (231 steel wheels only) SLK (172 steel wheels only)	000 990 83 07		B584B	Special black	M 14 x 1.5	R14	17	27	77
GLE (W167) GLE coupè (W167) GLS (from 2020)	-		B1279B	Special black	M 15 x 1.25	R14	17	45	86
GLE (W167) GLE coupè (W167) GLS (from 2020)	-		B1275B	Special black	M 15 x 1.25	R14	17	27	86

ORIGINAL EQUIPMENT ACCESSORIES

MERCEDES

Model	OEM Part Nr.	Picture	Art. Nr.	Finish	Thread	Seat	Hex	S	Pg
A-Klasse (W168) C-Klasse, Sportcoupé (W202), (W203), (S202), (S203), (CL203) CLC-Klasse (CL203) CLK (A208), (A209) E-Klasse (A124), (C124), (S124), (W124), (S210), (W210) SL (R129) SLK (R170), (R171) Vaneo (414) 190 (W201)	0009901007 0009904807 1244000070 1244000170 1244000470 2024000070 2034010270		B532	Galvanized	M 12 x 1.5	R12	17	40	69
			B532B	Special Black	M 12 x 1.5	R12	17	40	69
			B775	Galvanized	M 12 x 1.5	R12	17	40	70
A-Klasse (W169), (W176) CLA (C117) B-Klasse (W245), (W246) C-Klasse (C204), (S204), (S205), (W204), (W205) CLK (A209), (C209) CLS (C218), (C219), (X218) E-Klasse (A207), (C207), (S211), (S212), (W211), (W212) S-Klasse (C216), (W220) SL (R230), (R231) SLK (R172) SLR (R199) SLS AMG (A197), (C197) M-Klasse (W163), (W164), (W166) R-Klasse (W251), (V251) GL-Klasse (X164), (X166) GLA-Klasse (X156) GLK-Klasse (X204) Viano, Vito (W639)	0009904907 0009906707 0009906907 0009907207 0009907907 0009908307 0009908307 S1 0009909807 1634010070 1634010370 1634010670 2114010370		B584	Galvanized	M 14 x 1.5	R14	17	27	76
			B584G	Geomet	M 14 x 1.5	R14	17	27	76

ORIGINAL EQUIPMENT ACCESSORIES

MINI

Model	OEM Part Nr.	Picture	Art. Nr.	Finish	Thread	Seat	Hex	S	Pg
Mini (R50), (R52), (R53)	36130414574 36131122158 36131126014 36136781150		B103	Galvanized	M 12 x 1.5	Cone 60	17	26	59
			B103B	Special Black	M 12 x 1.5	Cone 60	17	26	60
Mini (R56), (R57), (R58), (R59), (F55), (F56) Countryman (R60) Clubman (R55) Clubvan (R55) Paceman (R61)	36136774896 36136781151		B185	Black	M 14 x 1.25	Cone 60°	17	27	62

MITSUBISHI

Model	OEM Part Nr.	Picture	Art. Nr.	Finish	Thread	Seat	Hex	S	Pg
ASX (GA0) Carisma (DA0) Colt (C50, CA0, CJ0, Z30, Z3B) Galant (E30, EA0) I-Miev (HA0, HAV) Lancer (CS0, CY0) L300 (PA0, PA0V, P00V, P00W) Outlander (CU0W, CW0) Pajero (H60W) Space Gear (PA0) Space Wagon (N10, N30, N50) Space Star (DG0, A00)	MR 297927 MA 103 087		N476	Yellow galv.	M 12 x 1.5	Cone 60°	21	16	39

ORIGINAL EQUIPMENT ACCESSORIES

MITSUBISHI

Model	OEM Part Nr.	Picture	Art. Nr.	Finish	Thread	Seat	Hex	S	Pg
ASX (GA0) Carisma (DA0) Colt (C50, CA0, CJ0, Z30, Z3B) Galant (E30, EA0) I-Miev (HA0, HAV) Lancer (CS0, CY0) L200 (KT0T) L300 (PA0, PA0V, P00V, P00W) Outlander (CU0W, CW0) Pajero (H60W) Space Gear (PA0) Space Wagon (N10, N30, N50) Space Star (DG0, A00)	MR 455707		N1000	Chrome plated	M 12 x 1.5	Flat	21	37.5	46
ASX (GA0) Carisma (DA0) Colt (C50, CA0, CJ0, Z30, Z3B) Galant (E30, EA0) I-Miev (HA0, HAV) Lancer (CS0, CY0) L300 (PA0, PA0V, P00V, P00W) Outlander (CU0W, CW0) Pajero (H60W) Space Gear (PA0) Space Wagon (N10, N30, N50) Space Star (DG0, A00)	MB 911495		S107	Galvanized	M 12 x 1.5	14.3		42	117

ORIGINAL EQUIPMENT ACCESSORIES

NISSAN

Model	OEM Part Nr.	Picture	Art. Nr.	Finish	Thread	Seat	Hex	S	Pg
Pixo (HF)	36181-4A0A2		N200	Galvanized	M 12 x 1.25	Cone 60°	19	17	25
Qashqai (J11) Micra (K14)	40254-00Q0P		B102	Galvanized	M 12 x 1.5	Cone 60°	17	24	59
Micra (K12) Note (E11)	40254-00QAB 40222-BC40A		B301	Galvanized	M 12 x 1.5	Cone 60°	19	26	89
All models with M12x1,25	-		N475	Yellow galv.	M 12 x 1.25	Cone 60°	21	16	39

OPEL

Model	OEM Part Nr.	Picture	Art. Nr.	Finish	Thread	Seat	Hex	S	Pg
Agila A (H00 up to chassis 3G999999)	4705 171		N200	Galvanized	M 12 x 1.25	Cone 60°	19	17	25

ORIGINAL EQUIPMENT ACCESSORIES

OPEL

Model	OEM Part Nr.	Picture	Art. Nr.	Finish	Thread	Seat	Hex	S	Pg
Antara (L-A)	4803 304		N301	Galvanized	M 12 x 1.5	Cone 60°	19	30	31
Mokka (J-A)	1.008.013		N1100	Galvanized	M 12 x 1.5	Cone 60°	19	36	35
Crossland X (P7) Grandland X (Z)	5405.67		B1075	Geomet	M 12 x 1.25	Flat	17	35	83
Adam Agila A/B (H00), (H08) Ascona C (81_), (84_), (86_), (87_), (88_), (89_) Astra F/G/H Calibra A (85_) Combo (71_), (X12), Corsa A/B/C/D Meriva /B, Omega A/B, Signum Tigra (95_) Vectra A/B/C (31_), (36_), (37_), (38_), (86_), (87_), (88_), (89_) Zafira A/B (F75_), (A05)	1008501 1008504 4709077	 	B101 B120	Galvanized Galvanized	M 12 x 1.5 M 12 x 1.5	Cone 60° Cone 60°	17 17	22 22	59 61

ORIGINAL EQUIPMENT ACCESSORIES

OPEL

Model	OEM Part Nr.	Picture	Art. Nr.	Finish	Thread	Seat	Hex	S	Pg
Astra J inkl. GTC, Mokka Senator, Monza, Antara	1008010		N176	Galvanized	M 12 x 1.5	Cone 60°	19	25	26

PEUGEOT

Model	OEM Part Nr.	Picture	Art. Nr.	Finish	Thread	Seat	Hex	S	Pg
106 (1A, 1C) 205 (20A, 20C) 306 (7A, 7D) 309 (10A, 10C) 405 (15B, 15E) 406 (8B) 605 (6B) Partner (HDZ, NFU)	5405.35		B1100	Galvanized	M 12 x 1.25	Flat	19	35	95
308 (4) 407 (6C, 6D) 3008 (OU) 5008 (O) Expert 3 Partner 3 Tepee Ranch 3	5405.72 160 873 44 80		B1370	Geomet	M 12 x 1.25	Cone 60°	17	26	87
107 (P) 108 (580W)	5405.77		B100	Galvanized	M 12 x 1.5	Cone 60°	17	21	59

ORIGINAL EQUIPMENT ACCESSORIES

PEUGEOT

Model	OEM Part Nr.	Picture	Art. Nr.	Finish	Thread	Seat	Hex	S	Pg
107 (P) 108 (580W)	5405.80 5405.85		B1151	Geomet	M 12 x 1.5	Flat	17	32.5	84
Expert (B/222, X) 807 (E)	5405.68 5405.69		B151G	Geomet	M 14 x 1.5	Cone 60°	17	25	63
I-on (1) 4007 (V) 4008 (B)	5405.81		N476	Yellow galv.	M 12 x 1.5	Cone 60°	21	16	39
4007 (V) 4008 (B)	5405.82		N1000	Chrome plated	M 12 x 1.5	Flat	21	37.5	46

ORIGINAL EQUIPMENT ACCESSORIES

PEUGEOT

Model	OEM Part Nr.	Picture	Art. Nr.	Finish	Thread	Seat	Hex	S	Pg
307, Break, CC, HEX (3A/C), (3B), (3E), (3H) 308 I/II, CC, HEX I/II (4A_), (4C_) 406, Break, Coupé (8B), (8C), (8E/F) 508, HEX 1007 (KM_) 2008 Expert (VF3__) Partner, Combispace (5), (5F)	5405.66 5405.84		B126	Galvanized	M 12 x 1.25	Cone 60°	17	26	58
106 II (1) 206, CC, HEX, 206+ (2A/C), (2D), (2E/K), (T3E) 207, CC, HEX (WA_), (WC_), (WD_), (WK_) 208, 301	5405.67		B1075	Geomet	M 12 x 1.25	Flat	17	35	83
I-on (1) 4007 (V) 4008 (B)	3714.28		S107	Galvanized	M 12 x 1.5	14.3		42	117

ORIGINAL EQUIPMENT ACCESSORIES

PORSCHE

Model	OEM Part Nr.	Picture	Art. Nr.	Finish	Thread	Seat	Hex	S	Pg
911 (930, 964, 991, 993, 996 from 2000, 997) Boxter (982, 986, 987) Cayman (9TA, 982) Panamera (970, 971)	997 361 203 01		B1250G	Geomet	M 14 x 1.5	R14	19	30	96
Macan (95B)	996 352 086 02 WHT 006 978		B1250B	Special black	M 14 x 1.5	R14	19	30	97
911 (996), (997) Boxter (986), (987) Cayman (987), (981) Macan (95B), (95BN)	997 361 203 01		B651	Galvanized	M 14 x 1.5	R14	19	30	95
			B651B	Special black	M 14 x 1.5	R14	19	30	96

ORIGINAL EQUIPMENT ACCESSORIES

PORSCHE

Model	OEM Part Nr.	Picture	Art. Nr.	Finish	Thread	Seat	Hex	S	Pg
Cayenne 92A, 92AN, 92AH, 92AHN	7L0 601 139 A		B652	Galvanized	M 14 x 1.5	R14	19	37	95
			B652B	Special black	M 14 x 1.5	R14	19	37	96
911 924 (964) 944	N0201121		N253	Galvanized	M 14 x 1.5	R14	19	20	29

RENAULT

Model	OEM Part Nr.	Picture	Art. Nr.	Finish	Thread	Seat	Hex	S	Pg
Espace (RFC) Laguna (T)	77 03 003 009		B152	Galvanized	M 14 x 1.5	Cone 60°	17	27	63
Koleos (Y)	40224-21001		N475	Yellow galv.	M 12 x 1.25	Cone 60°	21	16	39

ORIGINAL EQUIPMENT ACCESSORIES

RENAULT

Model	OEM Part Nr.	Picture	Art. Nr.	Finish	Thread	Seat	Hex	S	Pg
Clio I/II/III/IV Fluence (L30_) Kangoo. Grand Kangoo (W0/1_) Laguna I/II (K56_), (G0/1_) Logan (LS_), (KS_) Megane II/III, CC (M0/1_), (Z0/1_) Modus, Grand Modus (F/JP0_) Sandero, Stepway Scénic II/III, Grand Scénic II/III (M0/1_), (Z0/1_) Thalia I/II Twingo I/II (N0_) Wind	8200473313 8200610460		B103	Galvanized	M 12 x 1.5	Cone 60°	17	26	59
			B103B	Special Black	M 12 x 1.5	Cone 60°	17	26	60
Model up to 2008 (F75_), (A05)	402227272R		B102	Galvanized	M 12 x 1.5	Cone 60°	17	24	59

SEAT

Model	OEM Part Nr.	Picture	Art. Nr.	Finish	Thread	Seat	Hex	S	Pg
Alhambra (7MS from 1996 to 2000)	701 601 139B		B1025	Phosphated	M 14 x 1.5	R14	19	34	93

ORIGINAL EQUIPMENT ACCESSORIES

SEAT

Model	OEM Part Nr.	Picture	Art. Nr.	Finish	Thread	Seat	Hex	S	Pg
Alhambra (7MS from 2001 to 2010)	7M3601139B		B1380	Geomet	M 14 x 1.5	R14	19	34	97
Alhambra (710) Altea, Altea XL (5P_) Cordoba (6L_) Exeo, ST (3R_) Ibiza IV/V, ST (6L_), (6J_) Leon, SC (1M1), (1P1), (5F_) Toledo II/III/IV (1M2), (5P2), (KG3)	WHT 001812 WHT 002437 431601139 A 443601139 A 443601139 C 8D0601139 A 8D0601139 D		B950	Galvanized	M 14 x 1.5	R13	17	27	79
			B1125B	Special Black	M 14 x 1.5	R13	17	27	74
Arosa (6H) Cordoba (6K_) Ibiza I/II/III (6K_) Inca (6K_) Toledo I (1L)	3A0601139 321601139 C		B875	Galvanized	M 12 x 1.5	R13	17	25	78

ORIGINAL EQUIPMENT ACCESSORIES

ŠKODA

Model	OEM Part Nr.	Picture	Art. Nr.	Finish	Thread	Seat	Hex	S	Pg
Citigo (AA) Favorit (781) Felicia (791, 795, 797)	WHT 004 899 3A0 601 139		B875	Galvanized	M 12 x 1.5	R13	17	25	78
Fabia (6Y_) Octavia (1U_), (1Z_), (1E_) Rapid (NH_) Roomster (5J) Superb (3U4), (3T4), (3T5) Yeti (5L)	WHT 001812 WHT 002437 431601139 A 443601139 A 443601139 C 8D0601139 A 8D0601139 D		B950	Galvanized	M 14 x 1.5	R13	17	27	79
			B1125B	Special Black	M 14 x 1.5	R13	17	27	74

SMART

Model	OEM Part Nr.	Picture	Art. Nr.	Finish	Thread	Knurl	Hex	S	Pg
Forfour (454)	454 350 01 35 S1		S107	Galvanized	M 12 x 1.5	14.3		42	117

ORIGINAL EQUIPMENT ACCESSORIES

SMART

Model	OEM Part Nr.	Picture	Art. Nr.	Finish	Thread	Seat	Hex	S	Pg
Forfour (454)	454 402 00 72		N476	Yellow galv.	M 12 x 1.5	Cone 60°	21	16	39
Fortwo Forfour (W453)	A4539900007		B103	Galvanized	M 12 x 1.5	Cone 60°	17	26	59

SUZUKI

Model	OEM Part Nr.	Picture	Art. Nr.	Finish	Thread	Seat	Hex	S	Pg
Baleno (EW) Ignis (MF) Jimny (GJ) Swift (AZ)	09159-12057		N300	Galvanized	M 12 x 1.25	Cone 60°	19	30	31
Ignis MH HEXift EZ/MZ, NZ/FZ Wagon R+ MM, H00	43423-86G00		B120	Galvanized	M 12 x 1.5	Cone 60°	17	22	61

ORIGINAL EQUIPMENT ACCESSORIES

SUZUKI

Model	OEM Part Nr.	Picture	Art. Nr.	Finish	Thread	Seat	Hex	S	Pg
Alto FF, GF Baleno EG Ignis FH Grand Vitara JT Jimny FJ Kizashi FR Liana ER HEXift EA, MA Wagon R+ EM	4705 171		N200	Galvanized	M 12 x 1.25	Cone 60°	19	17	25

TESLA

Model	OEM Part Nr.	Picture	Art. Nr.	Finish	Thread	Seat	Hex	S	Pg
Model S model X	5 196 786		N1115	Zinc-Nickel	M 14 x 1.5	Cone 60°	21	42.5	44

ORIGINAL EQUIPMENT ACCESSORIES

TOYOTA

Model	OEM Part Nr.	Picture	Art. Nr.	Finish	Thread	Seat	Hex	S	Pg
Auris (E15J, E18UM) Avensis (T22, T25, T27, M2) Camry (V2, V10) Carina (T19U) Celica (T18, T20) C-HR (AX1T) Corolla (E10, E11, E12, R1) Hiace (H1) Hilux (N1, N16, N25S) IQ (AJ1) Paseo (L5) Previa (R3) Prius (HW2, HW3, HW4, HW5) RAV 4 (A2, XA3) Urban Cruiser (XP11) Verso (XP12) Yaris (P1, P2, XP9, XP13M)	90942-01033		N1000	Chrome plated	M 12 x 1.5	Flat	21	37.5	46
Land Cruiser (70, 100, 200, 400) Tundra Lexus (LX470, LX570)	90942-01103		N1010	Chrome plated	M 14 x 1.5	Flat	22	46.5	48
Aygo (AB1, 580W)	90942-W2001		B100	Galvanized	M 12 x 1.5	Cone 60°	17	21	59

ORIGINAL EQUIPMENT ACCESSORIES

TOYOTA

Model	OEM Part Nr.	Picture	Art. Nr.	Finish	Thread	Seat	Hex	S	Pg
Proace (V)	5405.72 160 873 44 80		B1370	Geomet	M 12 x 1.25	Cone 60°	17	26	87
Proace (V)	5405.67		B1075	Geomet	M 12 x 1.25	Flat	17	35	83
Aygo (AB1, 580W)	90942-W2002 5405.85		B1151	Geomet	M 12 x 1.5	Flat	17	32.5	84
Auris (E15_) Avensis, Verso (T22), (T25), (M2) Camry (V1_), (V2_), (V3_) Carina (T15_), (T17_), (T19_) Celica (T18_), (TA2_), (RA_)	90942-02049		S107	Galvanized	M 12 x 1.5	14.3		42	117
Corolla, Verso (E7_), (E8_), (E9_), (E10_), (E11_), (E12_) Hilux II (N5_), (N6_) iQ (N1) Landcruiser (J4_), (J6_), (J7_) MR 2 I/II (W1), (W2), (W3) Paseo (L5_) Picnic (XM1_)	90942-01007		N476	Yellow galv.	M 12 x 1.25	Cone 60°	21	16	39

ELLIS EXCELLENCE IN WHEEL ACCESSORIES

ORIGINAL EQUIPMENT ACCESSORIES

VOLKSWAGEN

Model	OEM Part Nr.	Picture	Art. Nr.	Finish	Thread	Seat	Hex	S	Pg
Transporter T2 Transporter T3	N 020 112 1		N253	Galvanized	M 14 x 1.5	R14	19	20	29
Sharan (7M from 1995 to 2000) Transporter T4 (7DZ)	701 601 139B 7M0 601 139A		B1025	Phosphated	M 14 x 1.5	R14	19	34	93
Sharan (7M from 2000 to 2010) Transporter T4 (2001-2003)	7M3 601 139B		B1380	Geomet	M 14 x 1.5	R14	19	34	97
Phaeton (3D)	4D0 601 139 A		B1390	Geomet	M 14 x 1.5	R13	17	27	85
Touareg (CR)	8R0 601 295		B1286	Geomet	M 14 X 1.5	R14	17	30	85

ORIGINAL EQUIPMENT ACCESSORIES

VOLKSWAGEN

Model	OEM Part Nr.	Picture	Art. Nr.	Finish	Thread	Seat	Hex	S	Pg
Transporter	-		B1400	Geomet	M 14 x 1.5	Cone 60°	19	30	92
Beetle (5C_) New Beetle Bora (1J_) Eos (1F7), (1F8) Fox (5Z_) Golf III/IV/V/VI/VII 5-Loch Golf Plus, Sportsvan Jetta III/IV Passat, CC, Alltrack 5-Loch Polo (9N_), (9A_), (6C_), (6R_) Scirocco (137), (138) Sharan (7N) Tiguan (5N_) Touran (1T_) Vento (1H2)	 WHT 001812 WHT 002437 431601139 A 443601139 A 443601139 C 8D0601139 A 8D0601139 D	 	B950 B1125B	Galvanized Special Black	M 14 x 1.5 M 14 x 1.5	R13 R13	17 17	27 27	79 74
Caddy I/II Corrado (53I) Derby Golf I/II/III/IV 4-Loch Jetta I/II Lupo (6X1), (6E1) Passat 4-Loch Polo (86), (80), (6N) Scirocco (53_) Vento (1H2)	 3A0601139 321601139 C		B875	Galvanized	M 12 x 1.5	R13	17	25	78

ORIGINAL EQUIPMENT ACCESSORIES

VOLKSWAGEN

Model	OEM Part Nr.	Picture	Art. Nr.	Finish	Thread	Seat	Hex	S	Pg
Amarok Touareg (7L_), (7P_) Multivan T5 (7__) Transporter T5 (7__)	WHT 001693 WHT 002529 WHT 004676 7L0 601139 7L0 601139A		B652	Galvanized	M 14 x 1.5	R14	19	37	95

ORIGINAL EQUIPMENT ACCESSORIES

VOLVO

Model	OEM Part Nr.	Picture	Art. Nr.	Finish	Thread	Seat	Hex	S	Pg
S60 (RH, F) S80 (T, A) V60 (F) C70 (N) S70/V70 (G) S90/V90 (P) V70 (J) XC60 (D) V70/XC70 (B) XC90 (C, L)	31362432		B1410	Galvanized	M 14 x 1.5	Cone 60°	19	34	98
240-260 V40/S40 (2004) V40/V50 (2004-2007) 850 C/SV70 (2000)	1273332 30870000 30873148 8665333 999359 3546651		N307	Galvanized	1/2 UNF	Cone 60°	19	30	31
			N476	Yellow galv.	M 12 x 1.5	Cone 60°	21	16	39
			N226	Phosphated	M 12 x 1.5	Cone 60°	19	15	24
			B800	Galvanized	M 12 x 1.75	Cone 60°	19	27	91

ELLIS®
EXCELLENCE
IN WHEEL ACCESSORIES

THE ELLIS MODEL CODE SYSTEM

BOLTS & NUTS

B	17	A	CN	21	
PART TYPE	WRENCH HEX SIZE IN MM	THREAD SIZE	SEAT FORM	NUTS	BOLTS
B Lug bolt *Vite fissaggio* *Radschraube* *Tornillo de fijacion* *Крепежный болт*	**17** Hex **19** *Chiave esagonale* **21** *Sechskantschlüssel* **22** *Llave exagonal* *Шестигранник*	**A** M 12 x 1.25	**S2** Ball seat radius 12 *Sede sferica raggio* 12 *Kugelbund* 12 *Asiento esferico radio de* 12 *Сфера радиус* 12	Height *Altezza* *Höhe* *Alto* *Высота*	Threaded length *Lunghezza filetto* *Gewindelaenge* *Longitud de filete* *Высота резба (болты)*
N Lug nut *Dado fissaggio* *Radmutter* *Tuercas de fijacion* *Колесные гайки*	**S0** External Head Ø 20 *Diametro esterno* Ø 20 *Aussen Durchmesser* Ø 20 *Diametro externo* Ø 20 *Внешний диаметр* Ø 20	**B** M 12 x 1.25	**S3** R13		
	S1 Ø 23	**C** M 12 x 1.75	**S4** R14		
	S5 Ø 21.6	**D** M 14 x 1.25	**CN** Cone seat 60° *Sede conica* 60° *Kegelbund* 60° *Asiento conico* 60° *Конус* 60°		
	TX Lock bolt / nut *Antifurto* *Diebstahlsicher* *Tuesca/tornillo antirrobo* *Безопасность*	**E** M 14 x 1.5	**FS** Flat seat *Sede piatta* *Flachsitz* *Asiento plano* *Плоское посадочное место*		
		F M 14 x 1.75	**RT** With shank *Con codolo* *Mit Schaft* *Con collarin* *с удлиненным цилиндром*		
		G M 14 x 2			
		H 1/2 UNF			
		I 7/16 UNF			
		J 3/8 UNF			
		K 9/16 UNF			
		L M 16 X 1.5			

SAMPLE CODE

Model code	Art.	Thread size	Hex	D	S	L	Finish	Stock
B17ACN21TB	B255	M 12 x 1.25	17	21	21	41	Galvanized	■

HEX	CONE	THREAD
17	60°	M12x1.25
MM	SEAT	SIZE

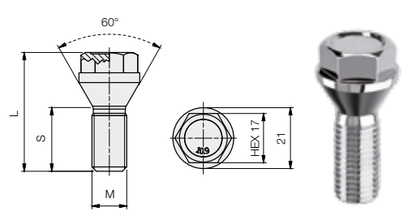

ONLY IF THESE CHARACTERISTICS ARE PRESENT OR ARE NON STANDARD

T B		21	C
NUTS	BOLTS	FINISH	PACKAGING
O Open lug nut *Dado fissaggio aperto* *Radmutter geöffnet* *Tuercas de fijacion abiertas* *Откртытые колесные гайки*	**ST** Standard head *Testa standard* *Standardkopf* *Adaptador estandar* *Головка std*	**00** Unfinished *Grezzo* *RoH* *Bruto* *Неоцинкованная*	**C** KIT - 16 PZ
C Closed lug nut *Dado fissaggio chiuso* *Radmutter geschlossen* *Tuercas de fijacion cerradas* *Глухие колесные гайки*	**TB** Short head lug bolt *Vite fissaggio testa bassa* *Kurzkopfbefestigungsschraube* *Tornillo de fijacion cabeza baja* *Крепежный болт с коротокой головкой*	**08** Special Black *Zincato Nero* *Special Black* *Special Black* *Special Black*	**D** KIT - 20 PZ
X With stainless steel cap *Con cappuccio acciaio inox* *Mit Edelstahl Kappe* *Con capuchon en acero inox* *С заглушкой из нержавеющей стали*	**TF** Hollow head *Testa forata* *Bohrkopf* *Cabeza perforada* *Пустотелая головка*	**11** 8.8 White galvanized 8.8 *Zincato Bianco* 8.8 *Weissverzinkt* 8.8 *Galvanizado* 8.8 *Оцинкованная*	
A Open lug nut + As 19/21 *Dado fissaggio aperto* + As 19/21 *Radmutter geöffnet* + As 19/21 *Tuercas de fijacion abiertas* + As 19/21 *Откртытые колесные гайки* + As 19/21	**TT** Head indentations *Testa tagliata* *Schraubenkopfschlitzen* *Cabeza perforada* *Пустотелая головка*	**21** 10.9 White galvanized 10.9 *Zincato Bianco* 10.9 *Weissverzinkt* 10.9 *Galvanizado* 10.9 *Оцинкованная*	
B Closed lug nut + As 19/21 *Dado fissaggio chiuso* + As 19/21 *Radmutter geschlossen* + As 19/21 *Tuercas de fijacion cerradas* + As 19/21 *Глухие колесные гайки* + As 19/21	**TL** Long hex head bolt *Testa esagonale lunga* *Langekopf* *Cabeza héxagonal largo* *Удлиненная головка*	**22** 10.9 Yellow galvanized 10.9 *Zincato Giallo* 10.9 *Gelbeverzinkt* 10.9 *Tropicalizado* 10.9 *Оцинкованная - жёлтая*	
	EI Socket head *Esagono incassato* *Innensechskanant* *Héxagono encajado* *Внутренний многогранник*	**23** 10.9 Zinc nickel black 10.9 *Zinco nickel nero* 10.9 *Zink Nickel Schwarz* 10.9 *Zinc niquel negro* 10.9 *Чёрный цинк никель*	
	AS Standard adapter *Adattatore standard* *Standardadaptar* *Adaptador estandar* *Стандартный переходник*	**24** 10.9 Phosphate coat 10.9 *Fosfatato* 10.9 *Phosphatiert* 10.9 *Fosfato* 10.9 *Фосфатированный*	
		25 10.9 Chrome plated 10.9 *Cromato* 10.9 *Chromat* 10.9 *Cromo* 10.9 *Хромированная*	
		26 10.9 Dacromet	
		27 10.9 Geomet	

ELLIS®
EXCELLENCE
IN WHEEL ACCESSORIES

GLOSSARY

SH

SW Spline Wheel stud
Prigioniero a piantare
Stiftschraube zum treiben
Prisionero a planta
Шпилька

SH Hub stud
Prigioniero a fissare
Stiftschraube zum befestigene
Prisionero para fijar
Шпилька

80

HUB STUDS

Total length
Lunghezza totale
Gesamtlänge
Longitud total
Длина винта

WHEEL STUDS

Knurling
Zigrinatura
Raedendelung
Moleteado
Накатку

B

THREAD SIZE	
A	M 12 x 1.25
B	M 12 x 1.5
C	M 12 x 1.75
D	M 14 x 1.25
E	M 14 x 1.5
F	M 14 x 1.75
G	M 14 x 2
H	1/2 UNF
I	7/16 UNF
J	3/8 UNF
K	9/16 UNF
L	M 16 X 1.5

50

HUB STUDS

Length A
Altezza A
Gewindelänge A
Alto A
Длина резьбы A

WHEEL STUDS

Under head shank length
Lunghezza gambo
Schraubenlaenge
Longitud de Vástago
длина стержня

15

HUB STUDS

Length B
Altezza B
Gewindelänge B
Alto B
Длина резьбы B

WHEEL STUDS

Head height
Altezza testa
Höhekopf
Altura cabeza
Высота головки

SAMPLE CODE

Model code	Art.	S	L	Z	Stock
SH80B5015	S126	50 mm	80 mm	15 mm	■

L / HEAD **80** MM | THREAD **M12x1.5** SIZE | **HUB STUD**

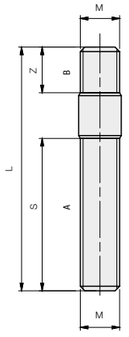

ENGLISH	ITALIANO	DEUTSCH	ESPAÑOL	РУССКИЙ
Hex	*Chiave esagonale*	*Sechskantschlüssel*	*Llave hexagonal*	*Шестигранник*
Tuner lug nut adaptor	*Adattatore dadi stellari*	*Sternadaptormutter*	*Adaptador de tuercas radiales*	*Адаптор к многогранным гайкам*
Tuner lug bolt adaptor	*Adattatore viti stellari*	*Sternadaptor schrauben*	*Adaptador de tornillos radiales*	*Адаптор к многогранным болтам*
Hex adaptor	*Adattatore esagono*	*Sechskantadaptor*	*Adaptador hexagonal*	*Ключ к секретке*
Lug wrench adaptor	*Adattatore chiave fissaggio*	*Zündschlüssel-adaptor*	*Adaptador llave de fijacion*	*Адаптер-переходник*
Lug nuts	*Dadi fissaggio*	*Radmutter*	*Tuercas de fijacion*	*Колесные гайки*
Closed lug nuts	*Dadi fissaggio chiusi*	*Radmutter geschlossen*	*Tuercas de fijacion cerradas*	*Глухие колесные гайки*
Open lug nuts	*Dadi fissaggio aperti*	*Radmutter geöffnet*	*Tuercas de fijacion abiertas*	*Открытые колесные гайки*
Off road lug nuts	*Dadi fissaggio off road*	*Radmutter off road*	*Tuerca de fijacion "off road"*	*Колесные гайки для внедорожников*
Closed off road lug nuts	*Dadi fissaggio off road chiuso*	*Radmutter off road geschlossen*	*Tuerca de fijacion "off road" cerrada*	*Глухие колесные гайки для внедорожников*
Open off road lug nuts	*Dadi fissaggio off road aperto*	*Radmutter off road geöffnet*	*Tuerca de fijacion "off road" abierta*	*Открытые колесные гайки для внедорожников*
Tuner nuts	*Dadi stellari*	*Sternschraube*	*Tuerca radial*	*Многогранные гайки*
Closed lock nuts	*Dado antifurto chiuso*	*Felgenschloss Mutter gesch.*	*Tuerca antirrobo cerrada*	*Глухая секретная гайка*
Open lock nuts	*Dado antifurto aperto*	*Felgenschloss Mutter geöffnet*	*Tuerca antirrobo abierta*	*Открытая секретная гайка*
Cone seat	*Sede conica*	*Kegelbund*	*Asiento conico*	*Конус*
Ball seat	*Sede sferica*	*Kugelbund*	*Asiento esferico*	*Сфера радиус*
Flat seat	*Sede piatta*	*Flachsitz*	*Asiento plano*	*Плоское посадочное место*
With shank	*Con codolo*	*Mit schaft*	*Con espiga*	*С удлиненным цилиндром*
With stainless steel cap	*Con cappuccio acciaio inox*	*Mit Edelstahl kappe*	*Con capuchon en acero inox*	*С заглушкой из нержавеющей стали*
With washer	*Con rondella*	*Mit Unterlegsscheibe*	*Con arandela*	*С шайбой*
Lug bolts	*Vite fissaggio*	*Radschraube*	*Tornillo de fijacion*	*Крепежный болт*
Short head lug bolt	*Vite fissaggio testa bassa*	*Kurzkopfbefestigungsschraube*	*Tornillo de fijacion cabeza baja*	*Крепежный болт с коротокой головкой*
Tuner lug bolt	*Vite fissaggio stellare*	*Sternförmige Befestigungsschraube*	*Tornillo de fijacion radial*	*Многранный крепежный болт*
Lock bolts	*Viti antifurto*	*Felgenschloss*	*Viti antifurto*	*Секретный болт*
Hollow head	*Testa forata*	*Bohrkopf*	*Cabeza perforada*	*Пустотелая головка*
Spline wheel stud	*Prigioniero a piantare*	*Stehbolzen*	*Prisionero a planta*	*Шпилька*
Hub stud	*Prigioniero a fissare*	*Radbolzen*	*Prisionero para fijar*	*Шпилька*
Finish	*Finitura*	*Ausführung*	*Acabado*	*Покрытие*
Galvanized	*Zincato*	*Verzinkt*	*Galvanizado*	*Оцинковнный*
Phosphate coat	*Fosfatato*	*Phosphatiert*	*Fosfato*	*Фосфатированный*
Dacromet	*Dacromet*	*Dacromet*	*Dacromet*	*Dacromet*
Geomet	*Geomet*	*Geomet*	*Geomet*	*Geomet*
Zinc nickel black	*Zinco nickel nero*	*Zink Nickel Schwarz*	*Znc niquel negro*	*Чёрный цинк никель*
Thread size	*Filettatura*	*Gewinde*	*Roscado*	*Шаг резбы*
Pcs	*Pezzi scatola*	*Stk*	*Unidades por caja*	*Штуки*
Stock	*In magazzino*	*Verfügbar*	*Almacen*	*Складские запасы*
May not be in stock - Please enquire	*Richiedere disponibilità*	*Verfügbarkeit prüfen*	*Consultar disponibilidad*	*Запрос наличия*
Model code	*Codice articolo*	*Artikel*	*Ref.*	*Артикул*
External diameter	*Diametro esterno*	*Aussen durchmesser*	*Diametro externo*	*Внешний диаметр*
Height	*Altezza*	*Höhe*	*Alto*	*Высота*
Wheel lock kits	*Kit fissaggio ruote*	*Räder-Befestigungset*	*kit de fijacion ruedas*	*Комплект секретных гаек*

GENERAL TERMS OF SALE

1. GENERAL INFORMATION

1.1 This document is intended for customers (hereinafter "Customers") of ELLIS ENGINEERING SRL (hereinafter simply ELLIS); its purpose is to inform customers about the contractual conditions that ELLIS shall apply in all the sales of its products (hereinafter GENERAL TERMS AND CONDITIONS OF SALE), unless otherwise agreed in writing, and which, in any case, are binding on and effective between the parties pursuant to art. 1341 of the Italian Civil Code.

1.2. ELLIS applies the Italian law in all contractual relationships involving the sale of its products, save for any specific derogations to be agreed and proved in writing.

1.3 The General Terms and Conditions of Sale listed here exclusively refer to products bearing the ELLIS trademark (hereinafter the "Products").

2. OFFERS - QUOTES

2.1 The offers made by ELLIS to its Customers are effective for a maximum period of 20 (twenty) days from their submission; in any case they will have to be formalized in writing, including by email.

2.2. Upon expiry of the aforementioned deadline, the offer made by ELLIS shall be deemed cancelled and not acceptable by the CUSTOMER, unless otherwise specifically agreed in writing between the contracting parties

3. ORDERS

3.1 Purchase orders signed by the Customers and addressed to ELLIS must be confirmed using the specific form prepared by ELLIS (order confirmation), which each Customer has to sign and return to ELLIS, precisely specifying the quantity of the goods bought and any additional features of the requested products.

3.2 The purchase contract shall be considered finalized and binding on the parties by means of:

a) confirmation of the purchase order by ELLIS ENGINEERING SRL;

b) physical execution of the purchase order by ELLIS ENGINEERING SRL, provided it is in compliance with the contents of the sale entered into between the parties.

3.3 Any amendment or addition to the individual provisions of the General Terms and Conditions of Sale or to the purchase order shall be ineffective unless approved in writing by ELLIS. In the event changes are made to the purchase order after sending the form specified in paragraph 3.1., they shall have no effect if in the meantime ELLIS has accepted the order or has implemented it in part; in any event, ELLIS reserves the right to cancel the original purchase order and to suspend performance of the current one, requesting damages.

3.4 The Product delivery date specified in the purchase orders is always indicative and any delay of up to 40 days with respect to such deadline shall never constitute grounds for the CUSTOMER to claim damages against ELLIS or to terminate the contractual relationship.

More specifically, ELLIS reserves the right to extend the delivery date due to unforeseeable circumstances or force majeure or in any case for circumstances that could not be foreseen at the time of the sale (for example, difficulty in procurement of raw materials and components); if prior to delivery, the CUSTOMER is in a difficult financial situation or changes its legal form, ELLIS shall be entitled to suspend performance of, and possibly terminate the contract.

4. DELIVERY AND SHIPPING

4.1 The Products are delivered to the Customer at the production site or at the registered office of ELLIS (hereinafter "Delivery").

4.2 If the Products are delivered Ex-works Fonzaso (BL) Incoterms 2010, the risk is transferred upon delivery of the Products by ELLIS ENGINEERING SRL to the Customer or to the carrier, the CUSTOMER being in charge of the transportation costs.

4.3 Unless otherwise agreed, ELLIS ENGINEERING SRL shall establish, in the name and on behalf of the Customer, the type of shipment, the transport route and the carrier.

4.4 ELLIS ENGINEERING SRL reserves the right to partially fulfil the purchase order or to partially deliver the products ordered. The Customer cannot raise any objection with regard to partial deliveries and/or deliveries made by instalments. All Partial deliveries shall be invoiced individually and the payment time limits shall run from the date of each invoice. The payment of partial Deliveries may not be deferred until completion of all the Deliveries related to the original purchase order. The provisions of Article 4.1 shall also apply to partial deliveries.

5. PRICES AND PRICE LISTS

5.1 The price is as specified in the last ELLIS offer, order o last ELLIS pricelist for the Customer, including normal packaging and excluding shipping costs (hereinafter the "Price"). The last price list issued by ELLIS ENGINEERING SRL cancels all previous price lists and, unless otherwise agreed, it shall be applicable to the sale.

6. PAYMENT

6.1 Payment of the Price has to be made within the time limit agreed between the contracting parties. Failure to pay the price within the agreed time limit shall result in the application of interest for late payment in commercial transactions, to the extent provided by Legislative Decree No. 231 of 9.10.2002 as amended and supplemented. Default interest shall run from the expiry of the payment due date, subject to ELLIS's right to seek compensation for any further damage.

6.2 The Customer may not make claims or raise objections against ELLIS until the Price has been paid.

6.3 In the event of irregular payments, ELLIS reserves the right to suspend the performance of all purchase orders, including those not affected by the delay or default by the CUSTOMER, without notice and with no right to compensation for the CUSTOMER.

7. RETURNS AND COMPLAINTS

7.1 Any complaints referring to either the quantity or the quality of the delivered Products must be made in writing within 8 (eight) days from receipt of the Products.

7.2 The Products returned shall be accepted by ELLIS ENGINEERING SRL only after written agreement and exclusively with regard to new Products with their original packaging.

7.3 The Products must be returned using the appropriate transport document specifying the written permission of ELLIS ENGINEERING SRL as well as the quantity and quality of the Products.

7.4 Returns shall not be considered accepted by ELLIS ENGINEERING SRL unless they are returned in the manner specified above and, specifically, taking delivery of the Products at the headquarters or at the warehouses of ELLIS ENGINEERING SRL may not be construed as acceptance of the returns.

7.5 The amount credited for returns not due to causes attributable to ELLIS ENGINEERING SRL, shall be subject to a 30% deduction, to be regarded as a flat-rate assessment of the damage (penalty clause), charged to the Customer on account of the general, shipping, goods deterioration, age etc. costs incurred by ELLIS.

8. WARRANTY

8.1 In business relationships or in case of products sold for professional use, this warranty is limited to the replacement of product / parts that ELLIS ENGINEERING SRL acknowledges as defective, through equivalent Products (the "Conventional Warranty"); the warranty does not include the costs necessary for repairing or replacing the material (e.g. labour costs, rental of equipment etc).

8.2 The provisions contained in articles 1490 to 1495 of the Italian Civil Code shall not apply.

8.3 ELLIS ENGINEERING SRL warrants the proper operation of the products within the limits indicated in 8.1 above. Unless otherwise agreed, the validity of the Conventional Warranty is 12 (twelve) months from the selling date, which can be found on the products by the batch number written on the packaging / product identification sheet. The Warranty shall be effective and binding on ELLIS only if the product has been correctly installed. The usage/ mounting mode of the products and the correct choice of them related to the use are direct and exclusive responsibility of the CUSTOMER.

8.4 The warranty does not cover: failures or damage caused by transport and/or by carelessness, negligence, failure or damage due to tampering, defects caused by chemical agents and/or atmospheric phenomena.

8.5 Implementation terms: unless otherwise agreed, the right to the Conventional Warranty is exercised by showing a copy of the purchase document (invoice) to ELLIS. Any defect must be notified to ELLIS within the time limit of thirty (30) days from detection of the defect. The action must be exercised within the limitation period of 6 (six) months from detection of the defect. The Product parts for which the Customer requests application of the Conventional Warranty must be returned by the Customer to ELLIS ENGINEERING SRL, Via G.Dorino 1, 32030 Fonzaso (BL) Italy.

8.6 The Customer cannot claim compensation for indirect damage, loss of profits, loss of production and in any case it cannot claim compensation for an amount that exceeds the value of the supplied components or products. All transport costs for Products that have been repaired or to be repaired, although covered by the Conventional Warranty, shall be charged to the Customer.

8.7 Specific amendments to the Conventional Warranty conditions described herein can be defined by the parties in their commercial contracts.

9. RESERVATION OF TITLE

9.1 The Products delivered to the CUSTOMER shall continue to be the property of ELLIS ENGINEERING SRL until full payment of the Price by the Customer, regardless of who has possession of the Products. Transport costs and other costs necessary to recover the Products as well as extraordinary expenses and those that can be recovered, shall be charged to the Customer.

10. PATENTS, TRADEMARKS AND DISTINCTIVE MARKS

10.1 The Customer is aware that the Products are covered by patents and incorporate know-how and design that are the exclusive property of ELLIS ENGINEERING SRL, pursuant to the Italian Industrial Property Code.

10.2 The Customer is expressly forbidden from infringing such ELLIS ENGINEERING SRL's rights; in any case, the Customer may not in any way remove, delete or otherwise alter the trademarks or other signs or distinctive marks of any kind affixed to Products or on packaging; the Customer is likewise forbidden from affixing new ones of any kind. Any form of reproduction or use of the ELLIS ENGINEERING SRL trademark and of any other distinctive mark on the Products is forbidden, without written authorization by ELLIS ENGINEERING SRL.

11. EXPRESS TERMINATION CLAUSE

11.1 Pursuant to article 1456 of the Italian Civil Code, any delay of more than ten days in the payment, or any non-payment of the Price, including partial, by the Client, as provided for in Article 6 of these General Terms and Conditions of Sale, shall result in termination of the purchase contract and ELLIS ENGINEERING SRL shall be entitled to seek compensation from the Customer for the damage suffered, in addition to restitution of the Products not paid by the Customer.

11.2 The notice referred to in the previous paragraph shall be sent by registered mail with return receipt or via certified email address (Pec).

12. AGREEMENT BETWEEN THE PARTIES

12.1 Any agreements, existing or that will take place between ELLIS ENGINEERING SRL and the Customer, in relation to returns and payment methods, shall prevail over the provisions of these General Terms and Conditions of Sale.

13. APPLICABLE LAW AND JURISDICTION

13.1 The purchase contracts entered into in accordance with the General Terms and Conditions of Sale are subject to Italian law only, with the exclusion of any other legislation.

13.2 All disputes that may arise on the mentioned purchase contracts shall be subject to Italian jurisdiction and referred to the exclusive competence of the Court of Vicenza, including if the agreed payment method is by bank collection order or draft payable at the customer's.

(Italy). The content of this catalogue is subject to change at any time and without notice by ELLIS ENGINEERING SRL.

CONDIZIONI GENERALI DI VENDITA

1. GENERALITÀ

1.1 Il presente documento si rivolge ai clienti (di seguito "Clienti") di ELLIS ENGINEERING SRL (di seguito solo ELLIS) con esso si intendono rendere note le condizioni contrattuali che ELLIS applicherà in tutte le vendite dei propri prodotti (di seguito CONDIZIONI GENERALI DI VENDITA), salvo diverse specifiche pattuizioni in deroga a quanto qui riportato, trattasi, in ogni caso, di condizioni che risultano vincolanti ed efficaci tra le parti ai sensi dell'art. 1341 Codice Civile.

1.2. ELLIS applica in tutti i rapporti contrattuali di vendita dei propri prodotti la legge italiana, salvo apposite deroghe che dovranno essere concordate e provate per iscritto.

1.3 Le Condizioni Generali di Vendita qui riportate si riferiscono esclusivamente ai prodotti portanti il marchio ELLIS (di seguito "Prodotti").

2. OFFERTE - PREVENTIVI

2.1 Le offerte formulate da ELLIS ai propri Clienti conservano efficacia per un periodo massimo di 20 (venti) giorni dalla data di invio delle stesse, in ogni caso dovranno essere formalizzate per iscritto, anche a mezzo mail.

2.2. Decorso tale termine l'offerta formulata da ELLIS dovrà ritenersi decaduta e non accettabile da parte del CLIENTE, salvo diverso specifico accordo scritto tra le parti contrattuali.

3. ORDINI

3.1 Gli ordini d'acquisto sottoscritti dai Clienti ed indirizzati a ELLIS ENGINEERING SRL dovranno essere confermati mediante apposito modulo predisposto da ELLIS (conferma d'ordine), che ciascun Cliente dovrà ritrasmettere a quest'ultima società, indicando, con precisione, il quantitativo della merce compravenduta e le ulteriori caratteristiche dei prodotti richiesti, previa apposizione della firma.

3.2 Il contratto d'acquisto si intende perfezionato e vincolante tra le parti mediante:

a) conferma dell'ordine d'acquisto da parte di ELLIS ENGINEERING SRL;

b) con l'esecuzione materiale dell'ordine d'acquisto da parte di ELLIS ENGINEERING SRL, purché rispettoso del contenuto della vendita conclusa tra le parti.

3.3 Qualsiasi modifica o integrazione di singole disposizioni delle Condizioni Generali di Vendita o dell'ordine d'acquisto sono prive di efficacia se non sono state approvate per iscritto da ELLIS. In caso di modifiche all'ordine d'acquisto, intervenute successivamente all'inoltro del modulo indicato al punto 3.1., le stesse non potranno considerarsi efficaci se nel frattempo ELLIS ha accettato l'ordine o vi ha dato esecuzione anche parziale, ELLIS si riserva comunque il diritto di annullare l'ordine d'acquisto originario e di sospendere l'esecuzione di quello in corso, chiedendo il risarcimento dei danni.

3.4 La data di consegna dei Prodotti indicata negli ordini d'acquisto ha sempre e comunque valore indicativo e l'eventuale ritardo rispetto a tale termine, per un periodo non superiore a giorni 40, non potrà mai costituire ragione per il CLIENTE affinché questi possa avanzare pretese risarcitorie nei confronti di ELLIS o per risolvere il rapporto contrattuale.

In particolare ELLIS si riserva la facoltà di prorogare i termini di consegna per caso fortuito o forza maggiore o comunque per eventi non prevedibili al momento della conclusione della vendita (ad esempio, per difficoltà di approvvigionamenti di materie prime e componenti); qualora prima della consegna del materiale il CLIENTE versi in una situazione di difficoltà finanziaria o comunque modifichi la propria forma giuridica, ELLIS ENGINEERING SRL potrà procedere alla sospensione dell'esecuzione del rapporto contrattuale interrompendone immediatamente l'esecuzione, ed eventualmente risolvendo il contratto.

4. CONSEGNA E SPEDIZIONE

4.1 I Prodotti vengono consegnati al CLIENTE nel luogo di produzione ovvero presso la sede legale di ELLIS (di seguito "Consegna").

4.2 Nel caso in cui i Prodotti siano consegnati Ex-works Fonzaso (BL) INCOTERMS 2010, il passaggio del rischio si realizza dal momento della Consegna dei Prodotti da parte di ELLIS ENGINEERING SRL al Cliente od al vettore, il CLIENTE assume inoltre i costi del trasporto.

4.3 Salvo diverso accordo, ELLIS ENGINEERING SRL stabilisce, in nome e per conto del Cliente, il tipo di spedizione, la via di trasporto e il vettore.

4.4 ELLIS ENGINEERING SRL si riserva la facoltà di effettuare esecuzioni o Consegne parziali degli ordini d'acquisto. Il Cliente non potrà sollevare contestazione alcuna in ordine a consegne frazionate e/o parziali. Tutte le Consegne parziali verranno fatturate autonomamente ed i termini di pagamento decorreranno dalla data di ciascuna fattura. Il pagamento delle Consegne parziali non potrà essere differito all'ultimazione delle Consegne relative all'ordine d'acquisto originario. Anche in caso di consegne parziali, troverà applicazione quanto stabilito dall'articolo 4.1.

5. PREZZI E LISTINI

5.1 Per prezzo si intende quello indicato nella offerta, nell'ordine o nell'ultimo listino ELLIS specifico per il Cliente, imballaggio normale compreso, e spese di spedizione escluse (di seguito "Prezzo"). L'ultimo listino emesso da ELLIS ENGINEERING SRL annulla tutti i listini precedenti ed, in assenza di diverse pattuizioni, sarà quello applicabile alla vendita.

6. PAGAMENTO

6.1 Il pagamento del Prezzo dovrà avvenire entro il termine pattuito tra le parti contraenti. Il mancato pagamento del Prezzo entro il termine convenuto determinerà la decorrenza di interessi per il ritardo di pagamento nelle transazioni commerciali, nella misura prevista dal D.Lgs. n. 231 del 9.10.2002 e successive modifiche ed integrazioni. Tali interessi decorreranno dalla scadenza del termine di pagamento è fatto salvo il maggior danno subito da ELLIS.

6.2 Il Cliente non potrà proporre domande né formulare eccezioni nei confronti di ELLIS se non dopo aver provveduto al pagamento del Prezzo.

6.3 In caso di irregolarità nei pagamenti, ELLIS si riserva il diritto di sospendere l'esecuzione di tutti gli ordini di acquisto, anche se diversi da quelli per i quali si è verificato il ritardo o l'inadempimento da parte del CLIENTE, senza alcun preavviso né diritto di risarcimento di alcun danno da parte del CLIENTE.

7. RESI E RECLAMI

7.1 Tutti i reclami devono essere formulati per iscritto entro 8 (otto) giorni dalla ricezione dei Prodotti, siano essi relativi alla quantità o alla qualità dei Prodotti consegnati.

7.2 I resi dei Prodotti consegnati verranno accettati da ELLIS ENGINEERING SRL soltanto previo accordo scritto ed esclusivamente con riguardo a Prodotti nuovi e completi di imballaggio originale.

7.3 I resi dovranno essere accompagnati dall'apposito documento di trasporto di reso, indicante l'autorizzazione scritta di ELLIS ENGINEERING SRL nonché la quantità e la qualità dei Prodotti.

7.4 I resi non potranno considerarsi accettati da ELLIS ENGINEERING SRL se non effettuati con le modalità di cui sopra ed in particolare non potrà intendersi quale accettazione di resi la presa in consegna di Prodotti presso la sede o i depositi di ELLIS ENGINEERING SRL.

7.5 Sulla somma accreditata riferita a resi non dovuti a cause imputabili a ELLIS ENGINEERING SRL, verrà operata una riduzione del 30% da considerarsi alla stregua di una liquidazione forfetaria del danno (clausola penale), addebitata al Cliente in ragione dei costi generali, di spedizione, deperimento della merce, vetustà etc. sopportati da ELLIS.

8. GARANZIA

8.1 La presente garanzia nei rapporti commerciali o in caso di vendita di beni per uso professionale è limitata alla sostituzione del pezzo / del Prodotto riconosciuto da ELLIS ENGINEERING SRL quale difettoso mediante Prodotti equivalenti (di seguito "Garanzia Convenzionale"), non risulta compresa nella garanzia il costo necessario per le attività di riparazione e sostituzione del materiale (a titolo esemplificativo costi di manodopera, noleggio materiali, etc).

8.2 È esclusa l'applicazione della disciplina dettata dagli articoli 1490-1495 del Codice Civile.

8.3 ELLIS ENGINEERING SRL garantisce il funzionamento dei Prodotti nei limiti indicati al superiore punto sub 8.1. Salvo diverso accordo, la validità della Garanzia Convenzionale è di 12 (dodici) mesi dalla data di vendita, rilevabile sui prodotti tramite il numero di lotto riportato su imballi/cartellini identificativi. La Garanzia risulterà efficace e vincolante per ELLIS ENGINEERING SRL solo se il prodotto verrà correttamente montato. Le applicazioni dei prodotti e la loro corretta scelta in funzione dell'applicazione sono di diretta ed esclusiva responsabilità del CLIENTE.

8.4 La garanzia non comprende: avarie o danni causati dal trasporto; e/o da trascuratezza, negligenza, inadeguatezza; avarie o danni dovuti a manomissioni o conseguenti allo scorretto uso/installazione; difetti causati da agenti chimici e/o fenomeni atmosferici.

8.5 Termini attuativi: salvo diverso accordo, il diritto alla Garanzia Convenzionale si esercita esibendo copia del documento di acquisto (fattura fiscale) a ELLIS. Il Cliente deve denunciare il difetto a ELLIS entro il termine di decadenza di 30 (trenta) giorni dalla scoperta.

L'azione deve essere esercitata entro il termine di prescrizione di 6 (sei) mesi dalla scoperta.

I pezzi dei Prodotti per i quali viene richiesta l'attivazione della Garanzia Convenzionale devono essere spediti dal Cliente presso ELLIS ENGINEERING SRL., Via G.Dorino 1, 32030 Fonzaso (BL) Italia.

8.6 Il Cliente non potrà richiedere il risarcimento di danni indiretti, mancati profitti, perdita di produzione ed in ogni caso non potrà pretendere a titolo di risarcimento somme superiori al valore dei componenti o dei Prodotti forniti. Tutte le spese per il trasporto dei Prodotti da riparare o riparati, anche se coperti dalla Garanzia Convenzionale, sono a carico del Cliente.

8.7 Modifiche specifiche delle condizioni della Garanzia Convenzionale qui descritte possono essere definite dalle parti nei propri contratti commerciali.

9. RISERVA DI PROPRIETÀ

9.1 I Prodotti forniti al CLIENTE, rimangono di proprietà di ELLIS ENGINEERING SRL fino al saldo integrale del Prezzo da parte del Cliente, indipendentemente da chi abbia la detenzione dei Prodotti. Le spese di trasporto e le altre necessarie al recupero dei Prodotti così come le spese straordinarie e quelle ripetibili, saranno a carico del Cliente.

10. BREVETTI, MARCHI E SEGNI DISTINTIVI

10.1 I I Cliente è a conoscenza del fatto che alcuni Prodotti sono coperti da brevetti e sono oggetto di Know-How e design costituenti proprietà esclusiva di ELLIS ENGINEERING SRL, a norma del Codice della Proprietà Industriale.

10.2 È fatto espresso divieto al Cliente di violare tali diritti di ELLIS ENGINEERING SRL ed in ogni caso il Cliente non potrà in alcun modo rimuovere, sopprimere o comunque alterare marchi ed altri segni distintivi o sigle di qualsiasi genere apposti ai Prodotti o agli imballi, così come è fatto divieto di apporne di nuovi di qualsiasi natura. È vietata inoltre qualsiasi forma di riproduzione od utilizzo del marchio ELLIS ENGINEERING SRL e di ogni altro segno distintivo presente sui Prodotti, salvo autorizzazione scritta di
ELLIS ENGINEERING SRL.

11. CLAUSOLA RISOLUTIVA ESPRESSA

11.1 Ai sensi e per gli effetti dell'articolo 1456 del Codice Civile, il ritardato pagamento superiore ai dieci giorni, o il mancato pagamento, anche solo parziale, del Prezzo da parte del Cliente, secondo le modalità di cui all'articolo 6 delle presenti Condizioni Generali di Vendita, comporterà la risoluzione del contratto di acquisto, con diritto per ELLIS ENGINEERING SRL di chiedere al Cliente il risarcimento dei danni patiti, oltre alla restituzione dei Prodotti rispetto ai quali il Cliente non abbia pagato il Prezzo.

11.2 La comunicazione di cui al punto precedente sarà trasmessa tramite raccomandata A.R. o tramite Pec.

12. ACCORDI TRA LE PARTI

12.1 In caso di accordi, preesistenti o sopravvenuti, tra ELLIS ENGINEERING SRL ed il Cliente, in relazione a resi e modalità di pagamento, tali accordi prevarranno su quanto a riguardo stabilito dalle Condizioni Generali di Vendita.

13. LEGGE APPLICABILE E FORO COMPETENTE

13.1 I contratti di acquisto conclusi secondo le Condizioni Generali di Vendita sono soggetti esclusivamente alla legge italiana, con esclusione di qualsiasi altra legislazione .

13.2 Tutte le controversie che dovessero sorgere in merito ai suddetti contratti d'acquisto saranno assoggettate alla giurisdizione italiana e rimesse alla competenza esclusiva del Tribunale di Vicenza, anche se il pagamento sia convenuto a mezzo ricevuta bancaria o tratta domiciliata presso il Cliente.

(Italia). Il contenuto di questo catalogo è da ritenersi suscettibile di modifica in qualsiasi momento e senza obbligo di preavviso da parte di ELLIS ENGINEERING SRL.

Tutte le specifiche dei prodotti citati, incluso caratteristiche tecniche, testi, grafici o altri elementi, hanno scopo meramente informativo e in nessun caso sostituiscono quanto riportato nei manuali d'uso e manutenzione dei singoli veicoli. Ellis Engineering S.r.l. acquisisce tali informazioni in via indiretta, pertanto raccomanda di verificare con il massimo scrupolo tutte le caratteristiche tecniche dei singoli prodotti onde appurare che siano rispondenti all'impiego e/o all'utilizzo cui l'acquirente intende destinarli. In nessun caso, Ellis Engineering Srl potrà ritenersi responsabile dell'uso improprio dei prodotti e dei danni che possano derivarne, a qualsiasi titolo, anche a terzi.

Le immagini, i disegni tecnici e le relative specifiche appartengono a Ellis Engineering Srl e sono protetti dalle leggi sul copyright. Ogni utilizzo non espressamente autorizzato sarà perseguito legalmente. Le specifiche dei prodotti sono soggette a cambiamenti senza preavviso. Possono essere richiesti, su specifiche del cliente, articoli con altre misure oppure a disegno. Foto immagini e disegni sono puramente indicativi. Ellis Engineering Srl si riserva il diritto di apportare qualsiasi tipo di variazione, anche senza preavviso, al fine di aggiornare e migliorare il catalogo in qualsiasi momento. Ellis Engineering Srl non risponde per eventuali errori tipografici o descrizioni errate di prodotti e caratteristiche tecniche.

The specifications of the products indicated in this catalogue including technical characteristics, texts, drawings, graphics or other elements are for informative purposes only and in no case replace the instructions of the manuals of use and maintenance of the vehicles. Ellis Engineering Srl acquires such information indirectly, therefore it recommends to carefully verify all the technical characteristics of the products in order to ascertain their suitability for the use intended by the buyer. It is highly recommended to contact an authorized tyre shop for the replacement of the products. Under no circumstances may Ellis Engineering Srl be held liable for the improper use of the products and for the possible damages that may derive, for any reason, even to third parties.

All images, technical drawings and specifications are the exclusive property of Ellis Engineering Srl and are protected by International Copyright laws. Any unauthorised use will result in legal proceedings. Ellis Engineering Srl reserves the right to alter technical specifications at any time without notice. Clients may request bespoke products of different sizes and/or based on customised designs. All photographs and other images shown are for informational purposes only. Ellis Engineering Srl reserves the right to make any kind of alteration, at any time and without prior notice so as to update and improve the catalogue. Ellis Engineering Srl is not liable for any errors or other mistakes in the technical descriptions and technical characteristics of the products shown.

ELLIS ENGINEERING SRL
part of Comunello Group
Via G. Dorino, 1 - 32030 Fonzaso (BL) Italy
Tel. +39 0439 569546 Fax +39 0439 569552
info@ellisengineering.it www.ellisengineering.it

Concept and design: Caseley Giovara Srl
Rev. 04 - 06/2022

www.ellisengineering.it